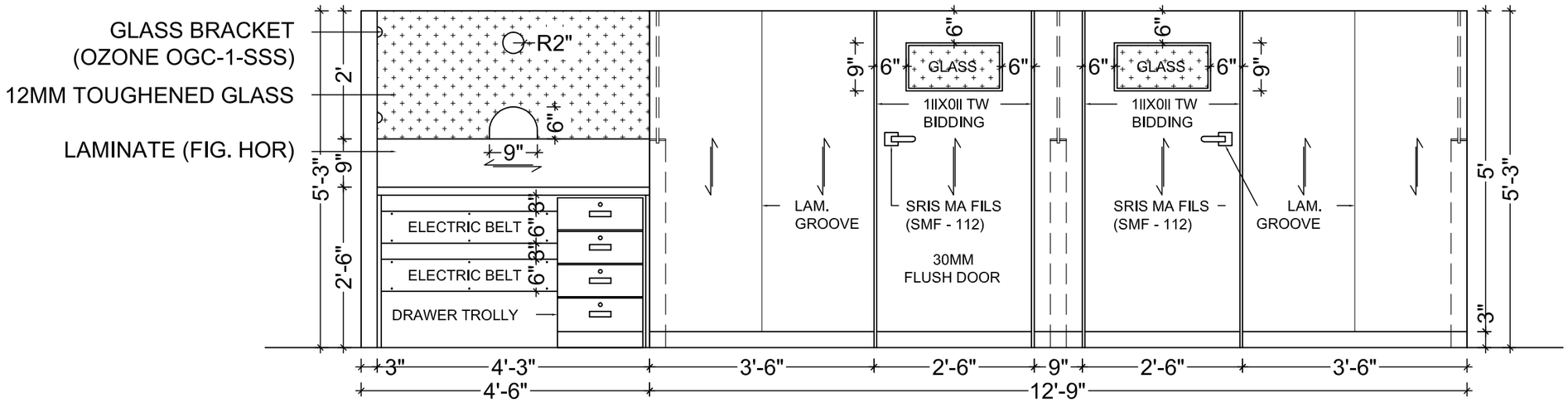

CASH CABINE BACK ELEVATION

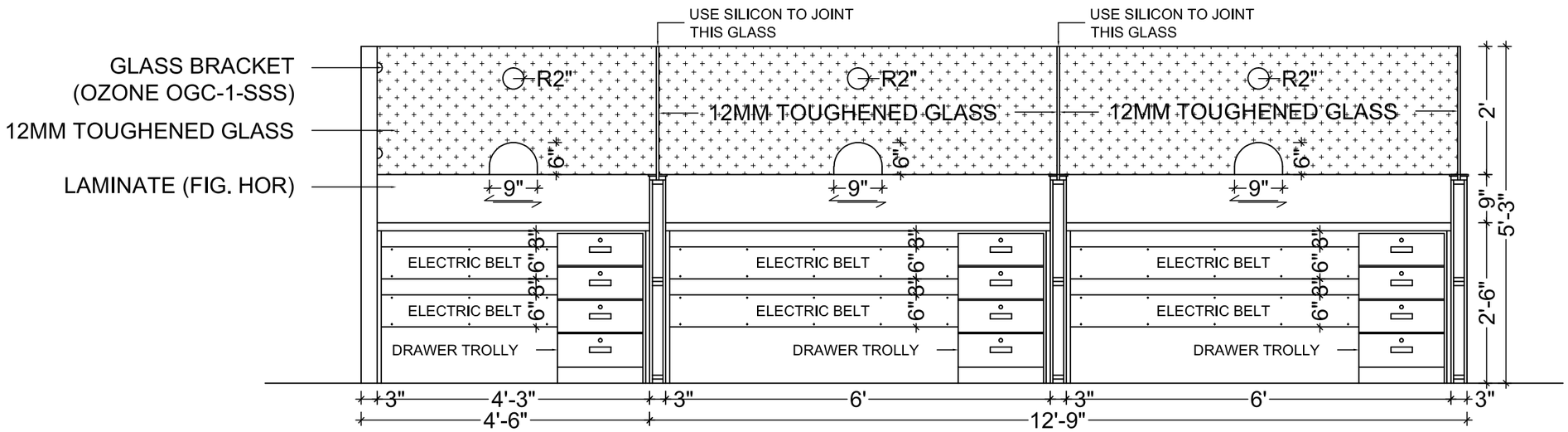

CASH CABINE SECTION - AA

CASH CABIN DETAIL - 2 (CCD2)

NOTE :- CHECK DIMENSION AT SITE BEFORE EXECUTION

V n B Designs
Architecture & Interior
Anil Vadgama
Architect
9824167971
210, naxtra II commercial complex, opp. k.k.v hall, 150 feet wide ring road, rajkot- 360 005.
e-mail : vnbdesigns@rediffmail.com

REVISED 02

PROPOSED FIRST FLOOR PLAN
at EXISTING BULDING OF
RAJKOT NAGRIK SAHKARI BANK
at DHORAJI ,

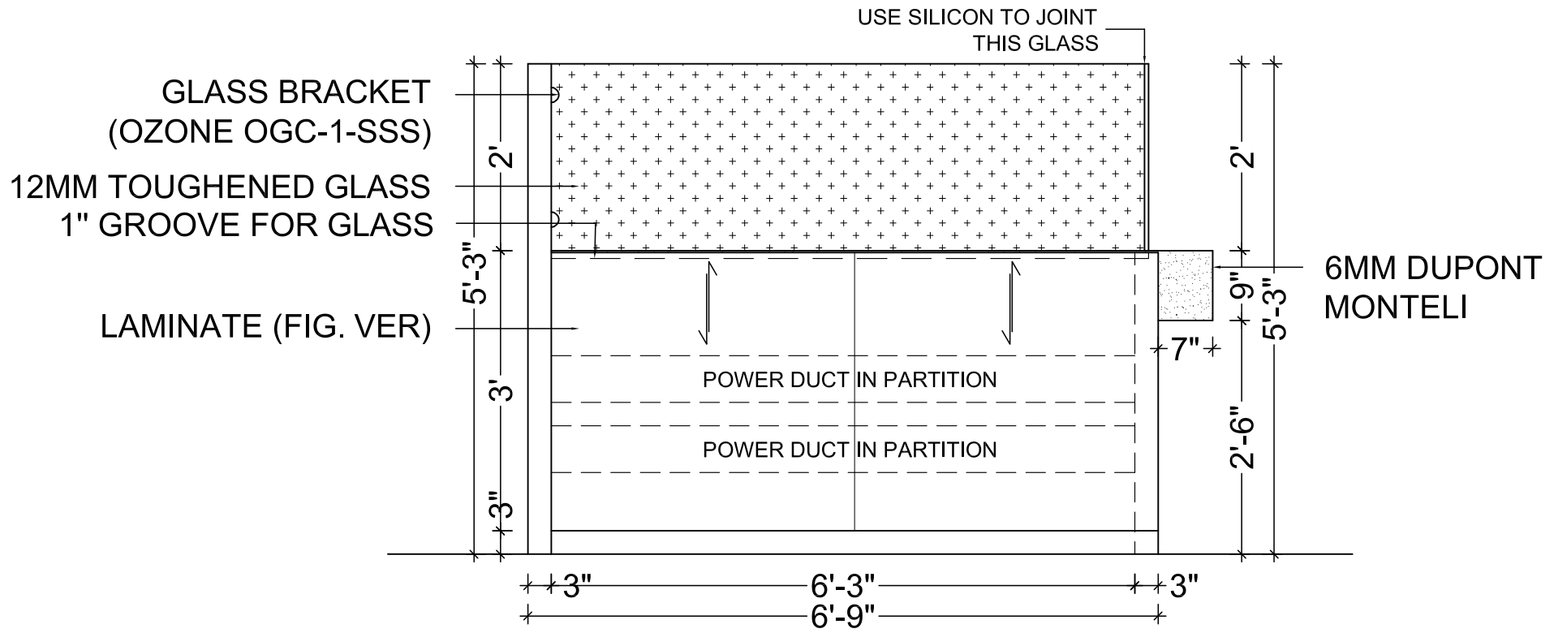

CASH CABINE SIDE ELEVATION

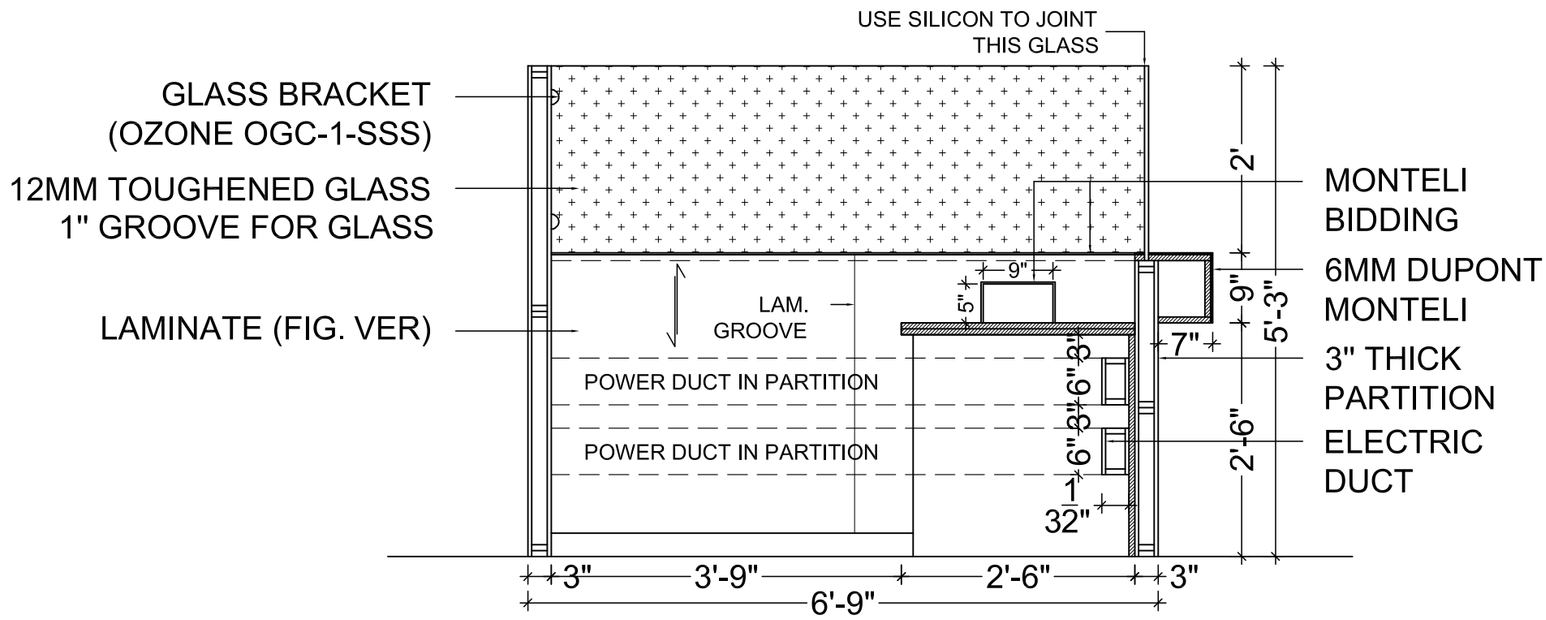

CASH CABINE SECTION - BB

CASH CABIN DETAIL - 3 (CCD3)

NOTE :- CHECK DIMENSION AT SITE BEFORE EXECUTION

PROPOSED FIRST FLOOR PLAN
at EXISTING BULDING OF
RAJKOT NAGRIK SAHKARI BANK
at DHORAJI ,

REVISED 02

V n B Designs
Architecture & Interior
Anil Vadgama
Architect
9824167971
210, naxtra II commercial complex, opp. k.k.v hall, 150 feet wide ring road,
rajkot- 360 005, e-mail : vnbdesigns@rediffmail.com

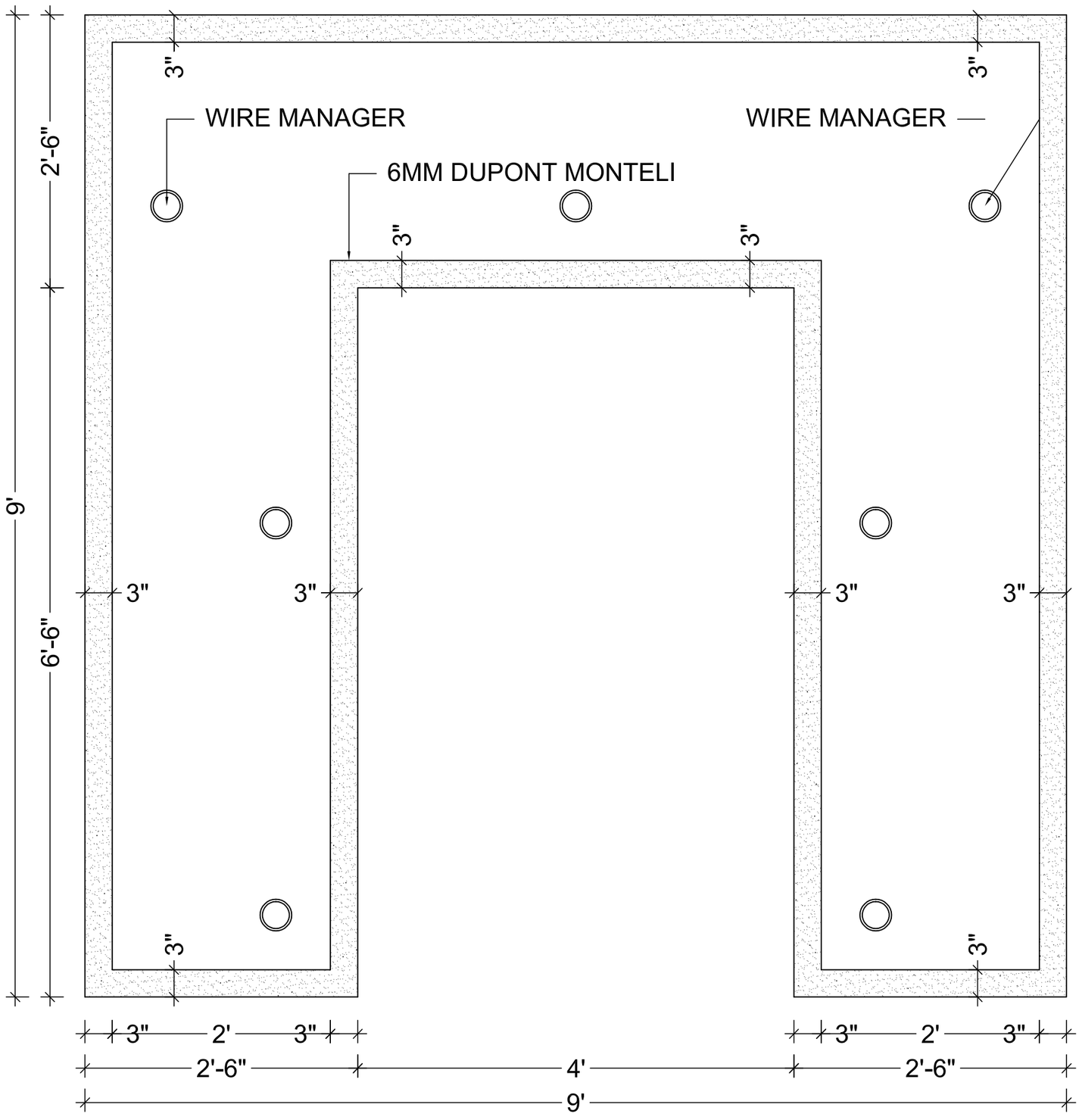

TOP PLAN

CONFERENCE ROOM TABLE DETAIL (CRT - 1)

NOTE :- CHECK DIMENSION AT SITE BEFORE EXECUTION

PROPOSED SECOND FLOOR PLAN
at EXISTING BULDING OF
RAJKOT NAGRIK SAHKARI BANK
at DHORAJI ,

REVISED 02

V n B Designs
Architecture & Interior
Anil Vadgama
Architect
98241 67971
210, naxtra II commercial complex, opp. k.k.v hall, 150 feet wide ring road,
rajkot- 360 005, e-mail : vnbdesigns@rediffmail.com

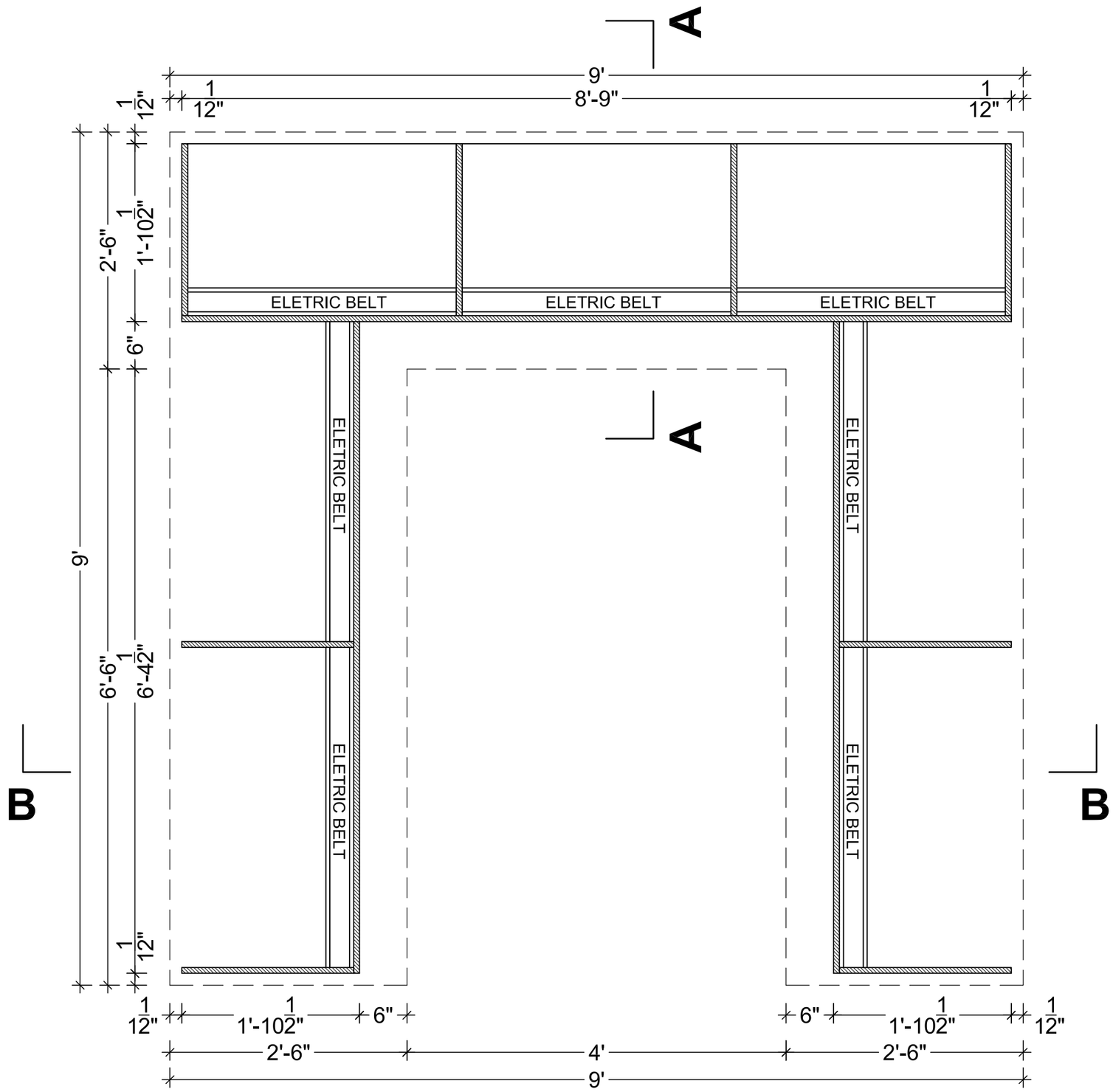

PLAN (LVL 2'0")

CONFERENCE ROOM TABLE DETAIL (CRT - 2)

NOTE :- CHECK DIMENSION AT SITE BEFORE EXECUTION

PROPOSED SECOND FLOOR PLAN
at EXISTING BULDING OF
RAJKOT NAGRIK SAHKARI BANK
at DHORAJI ,

REVISED 02

V n B Designs
Architecture & Interior
Anil Vadgama
Architect
98241 67971
210, naxtra II commercial complex, opp. k.k.v hall, 150 feet wide ring road,
rajkot- 360 005, e-mail : vnbdesigns@rediffmail.com

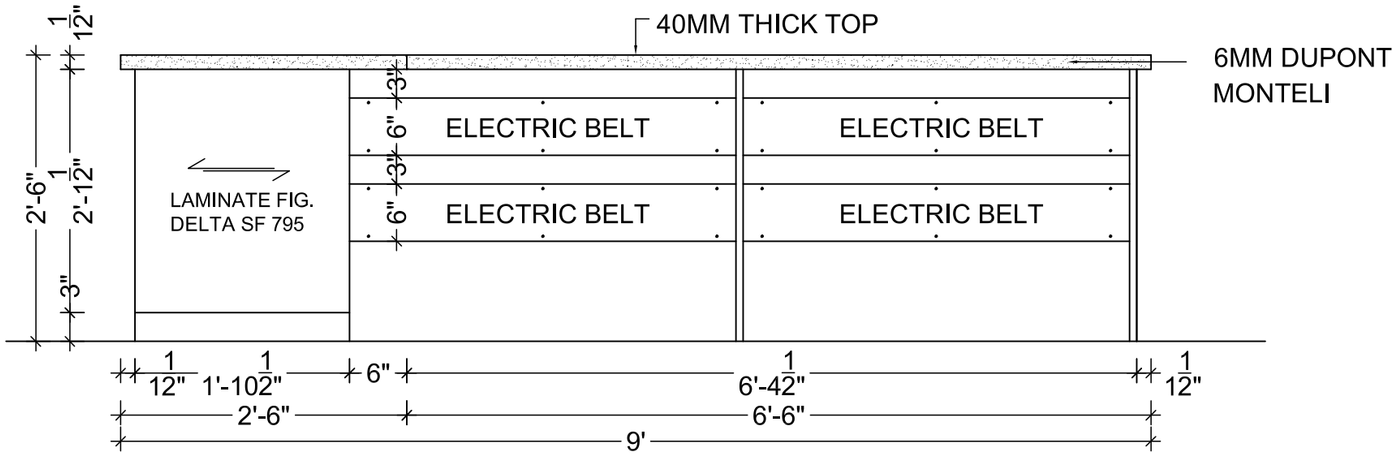

RIGHT SIDE ELEVATION

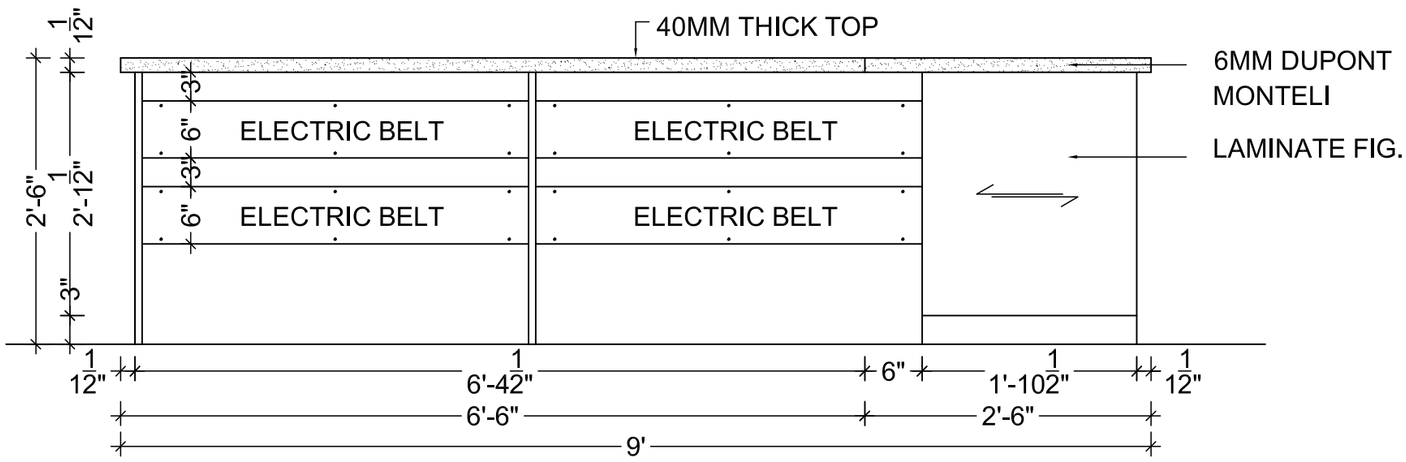

LEFT SIDE ELEVATION

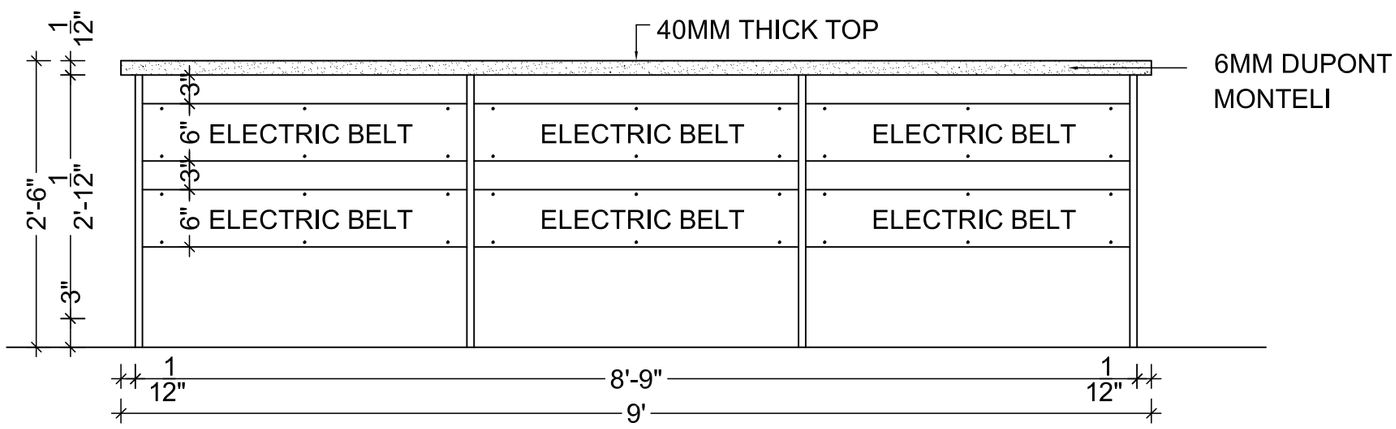

BACK SIDE ELEVATION

CONFERENCE ROOM TABLE DETAIL (CRT - 3)

NOTE :- CHECK DIMENSION AT SITE BEFORE EXECUTION

PROPOSED SECOND FLOOR PLAN
at EXISTING BULDING OF
RAJKOT NAGRIK SAHKARI BANK
at DHORAJI ,

REVISED 02

V n B Designs
Architecture & Interior
Anil Vadgama
Architect
98241 67971
210, naxtra II commercial complex, opp. k.k.v hall, 150 feet wide ring road,
rajkot- 360 005, e-mail : vnbdesigns@rediffmail.com

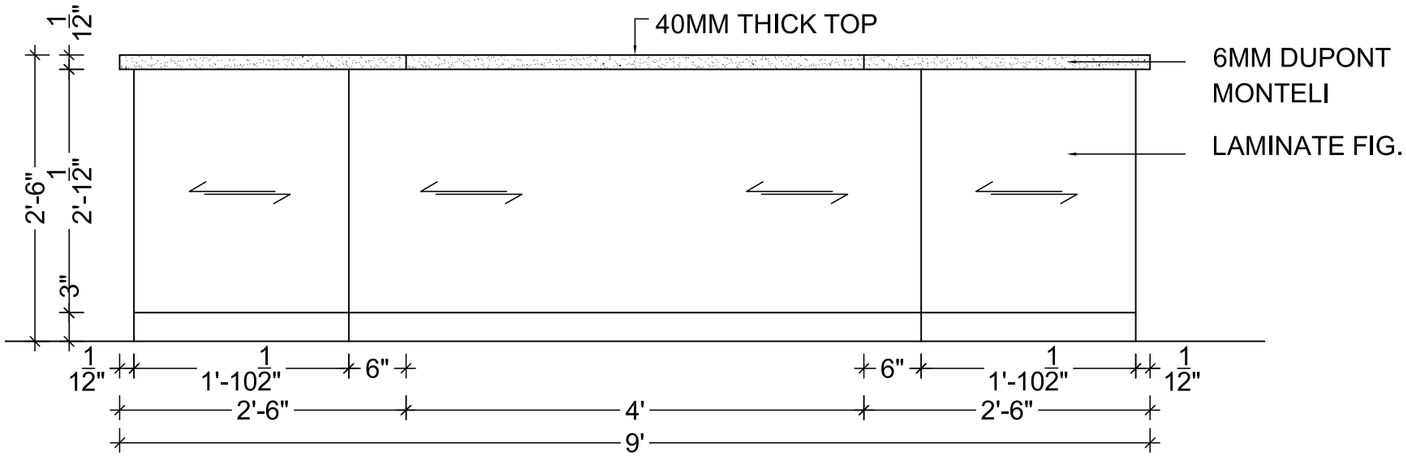

FRONT ELEVATION

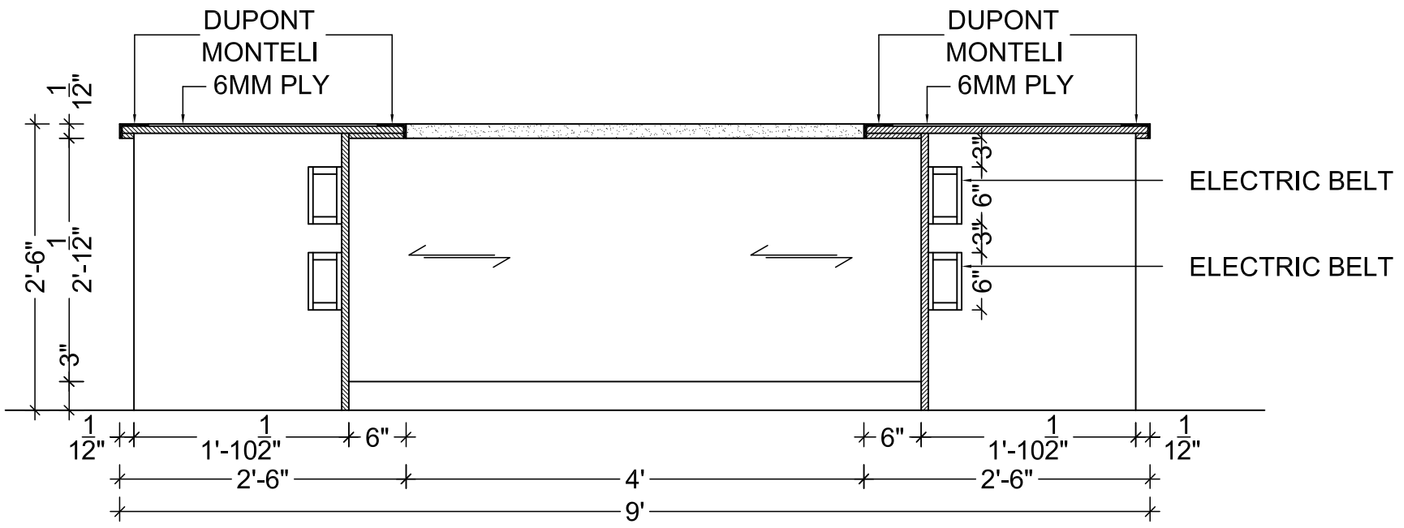

SECTION BB

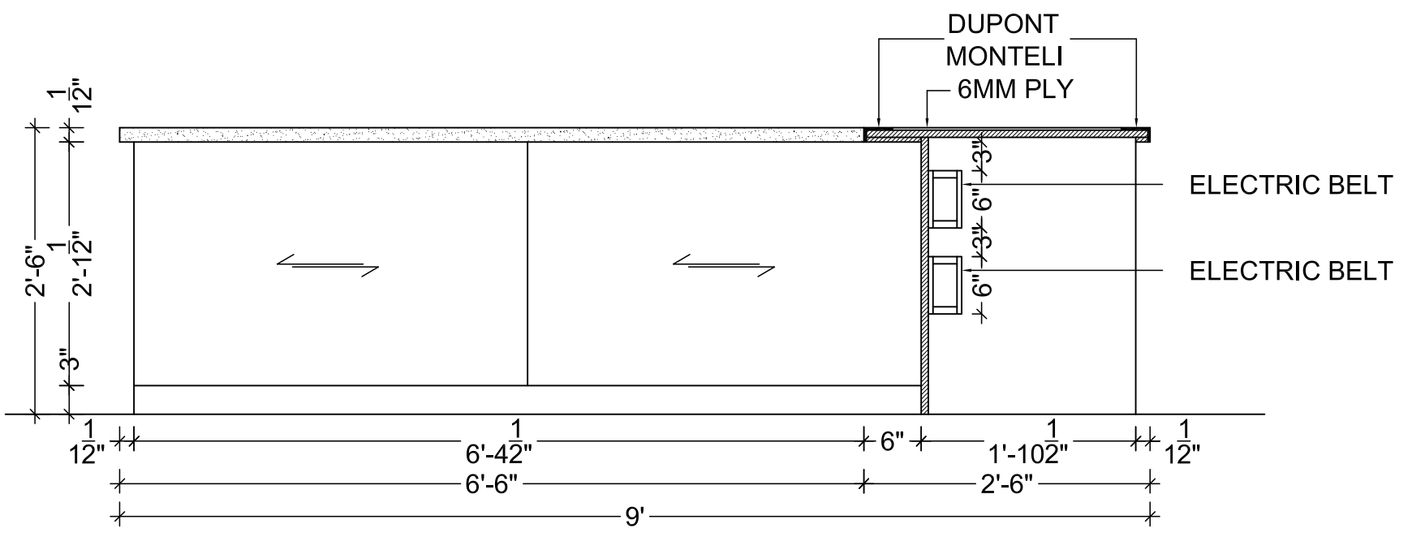

SECTION AA

CONFERENCE ROOM TABLE DETAIL (CRT - 4)

NOTE :- CHECK DIMENSION AT SITE BEFORE EXECUTION

PROPOSED SECOND FLOOR PLAN
at EXISTING BULDING OF
RAJKOT NAGRIK SAHKARI BANK
at DHORAJI ,

REVISED 02

V n B Designs
Architecture & Interior
Anil Vadgama
Architect
98241 67971
210, naxtra II commercial complex, opp. k.k.v hall, 150 feet wide ring road, rajkot- 360 005,
e-mail : vnbdesigns@rediffmail.com

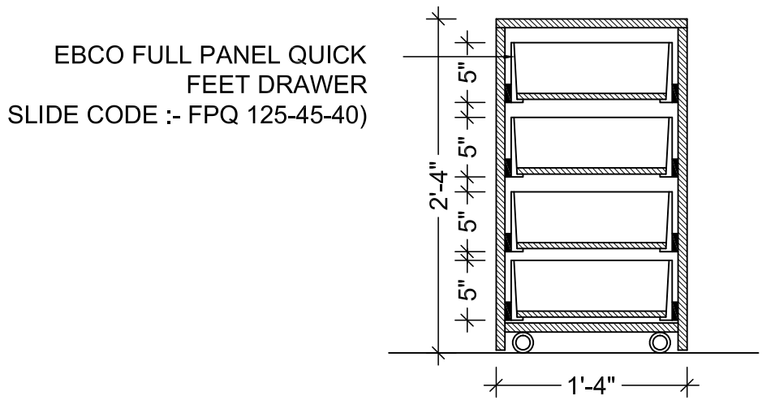

SECTION AA

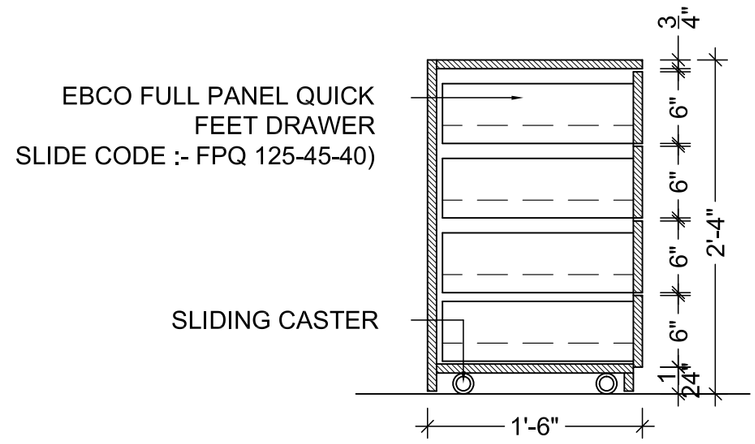

SECTION BB

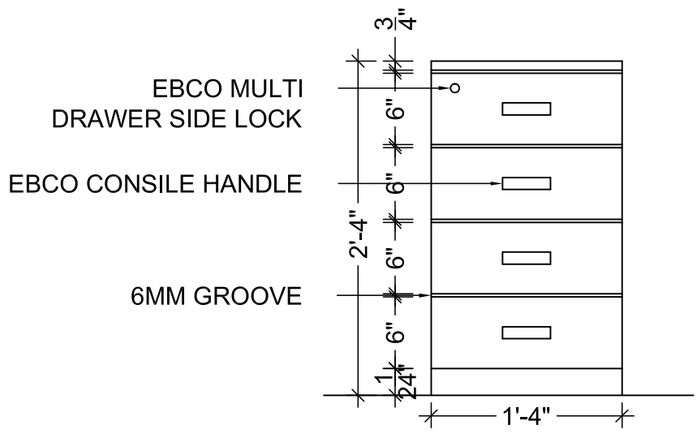

FRONT ELEVATION

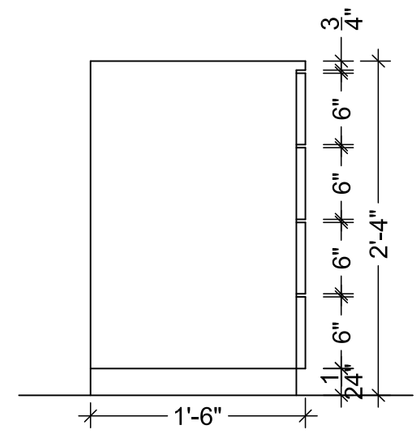

SIDE ELEVATION

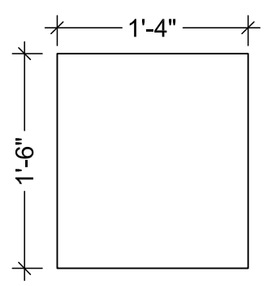

DRAWER TROLLY TOP PLAN

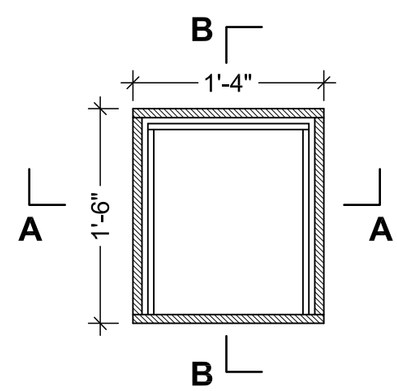

DRAWER TROLLY PLAN (LVL1'9")

DRAWER TROLEY DETAIL (DTD1)

NOTE :- CHECK DIMENSION AT SITE BEFORE EXECUTION

PROPOSED FIRST FLOOR PLAN
at EXISTING BULDING OF
RAJKOT NAGRIK SAHKARI BANK
at DHORAJI ,

REVISED 02

V n B Designs
Architecture & Interior
Anil Vadgama
Architect
9824167971
210, naxtra II commercial complex, opp. k.k.v hall, 150 feet wide ring road,
rajkot- 360 005, e-mail : vnbdesigns@rediffmail.com

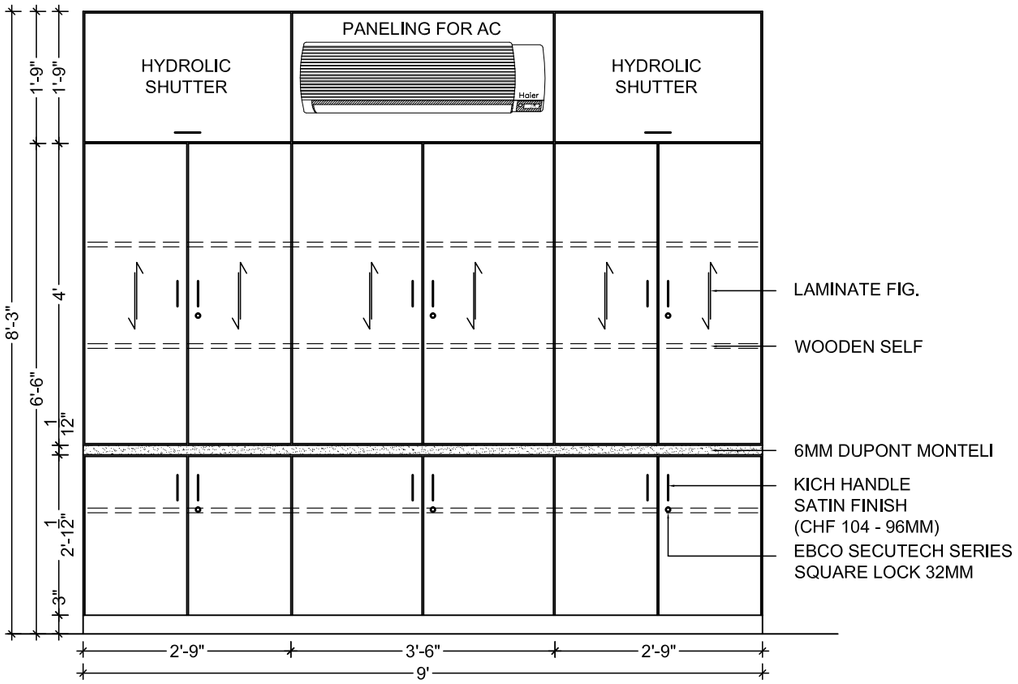

FRONT ELEVATION

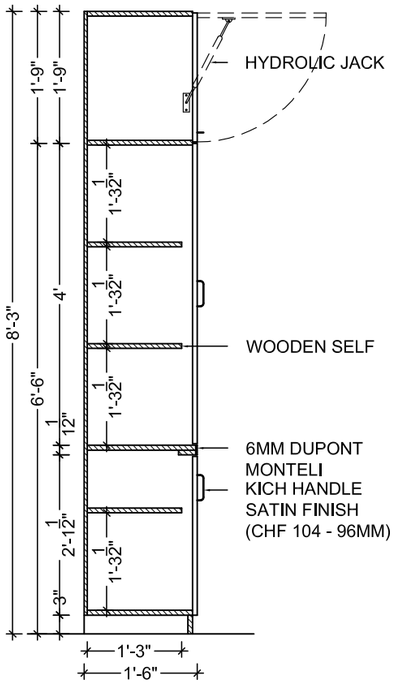

SECTION AA

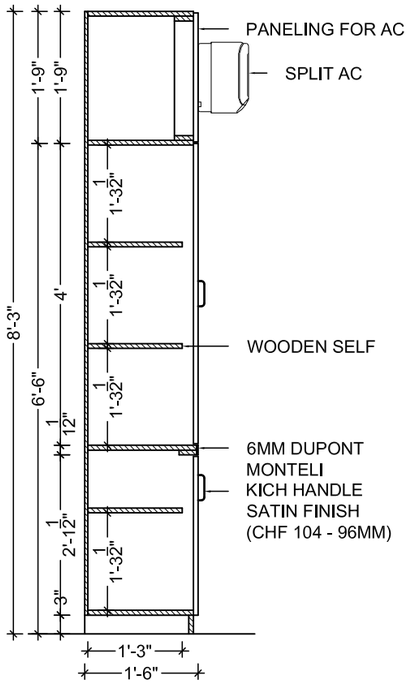

SECTION BB

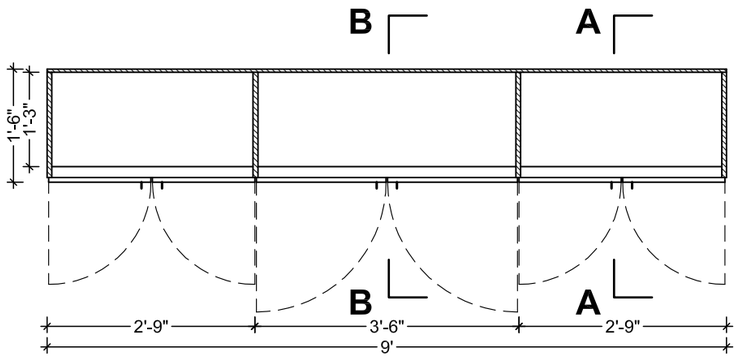

PLAN (LVL4'0")

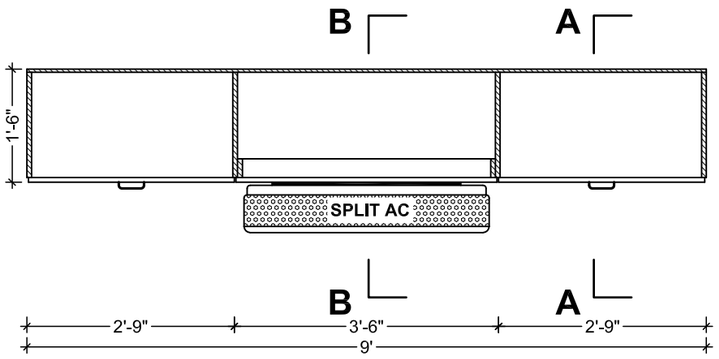

PLAN (LVL7'0")

CUPBOARD DETAIL (CB1)

NOTE :- CHECK DIMENSION AT SITE BEFORE EXECUTION

V n B Designs
Architecture & Interior
Anil Vadgama
Architect
9824167971
210, naxtra II commercial complex, opp. k.k.v hall, 150 feet wide ring road, rajkot- 360 005.
e-mail : vnbdesigns@rediffmail.com

REVISED 02

PROPOSED FIRST FLOOR PLAN
at EXISTING BULDING OF
RAJKOT NAGRIK SAHKARI BANK
at DHORAJI ,

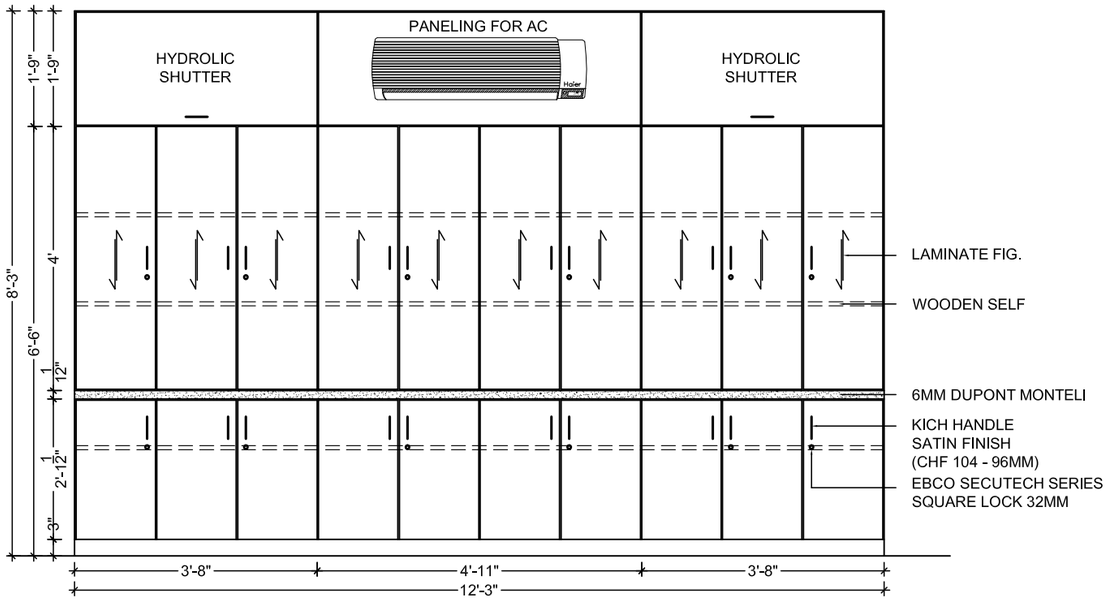

FRONT ELEVATION

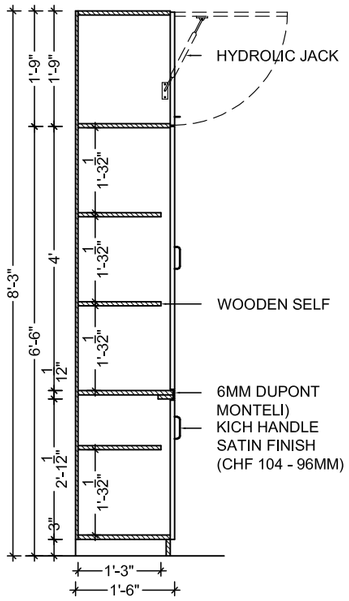

SECTION AA

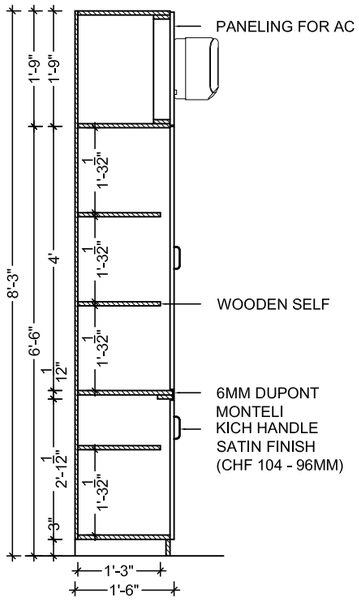

SECTION BB

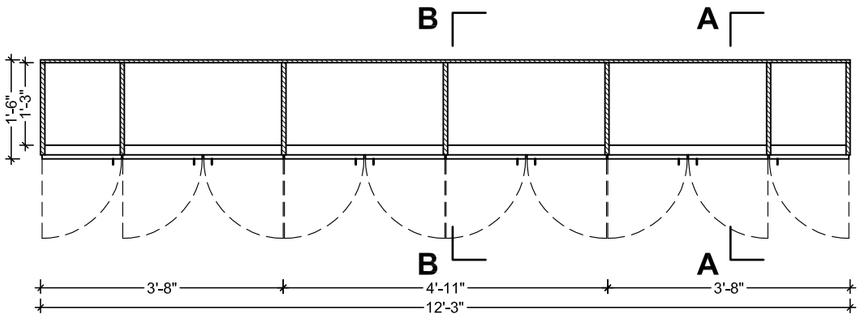

PLAN (LVL4'0")

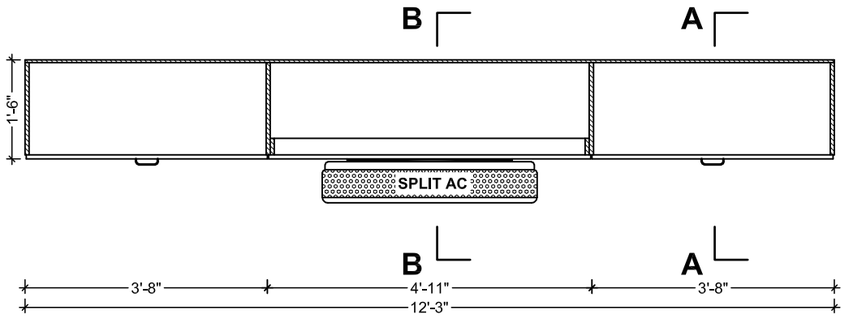

PLAN (LVL7'0")

CUPBOARD DETAIL (CB2)

NOTE :- CHECK DIMENSION AT SITE BEFORE EXECUTION

V n B Designs
Architecture & Interior
Anil Vadgama
Architect
9824167971
210, naxtra II commercial complex, opp. k.k.v hall, 150 feet wide ring road, rajkot- 360 005.
e-mail : vnbdesigns@rediffmail.com

REVISED 02

PROPOSED FIRST FLOOR PLAN
at EXISTING BULDING OF
RAJKOT NAGRIK SAHKARI BANK
at DHORAJI ,

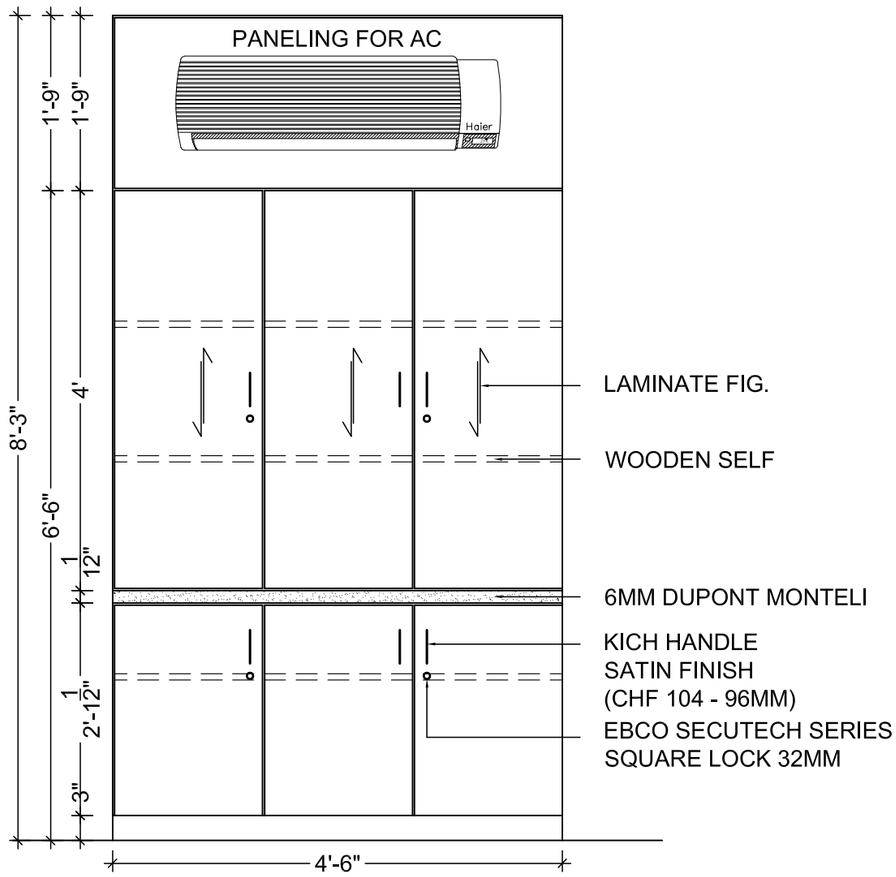

FRONT ELEVATION

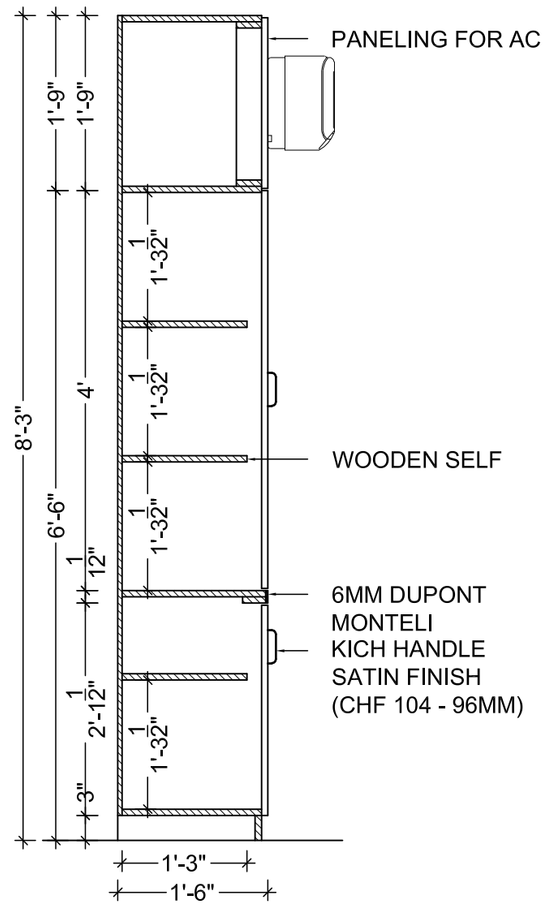

SECTION AA

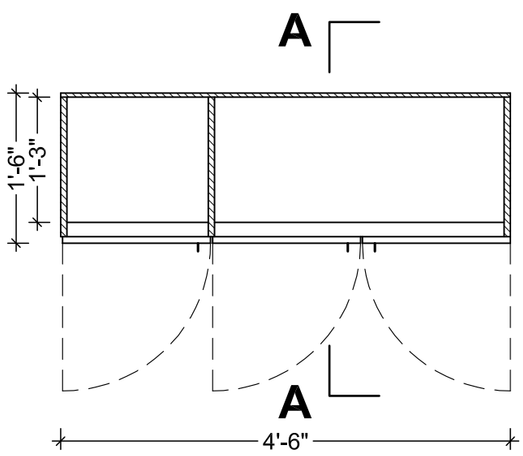

PLAN (LVL4'0")

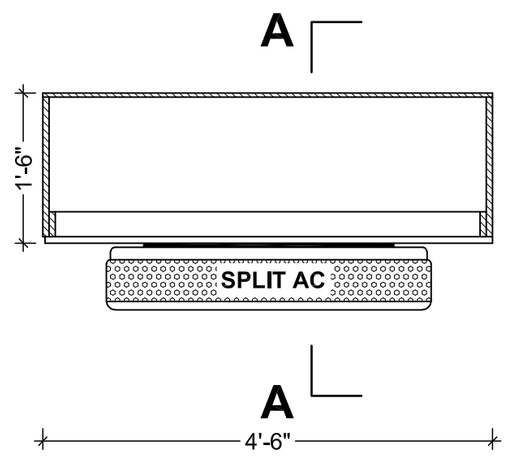

PLAN (LVL7'0")

CUPBOARD DETAIL (CB3)

NOTE :- CHECK DIMENSION AT SITE BEFORE EXECUTION

PROPOSED FIRST FLOOR PLAN
at EXISTING BULDING OF
RAJKOT NAGRIK SAHKARI BANK
at DHORAJI ,

REVISED 02

V n B Designs
Architecture & Interior
Anil Vadgama
Architect
98241 67971
210, naxtra II commercial complex, opp. k.k.v hall, 150 feet wide ring road,
rajkot- 360 005, e-mail : vnbdesigns@rediffmail.com

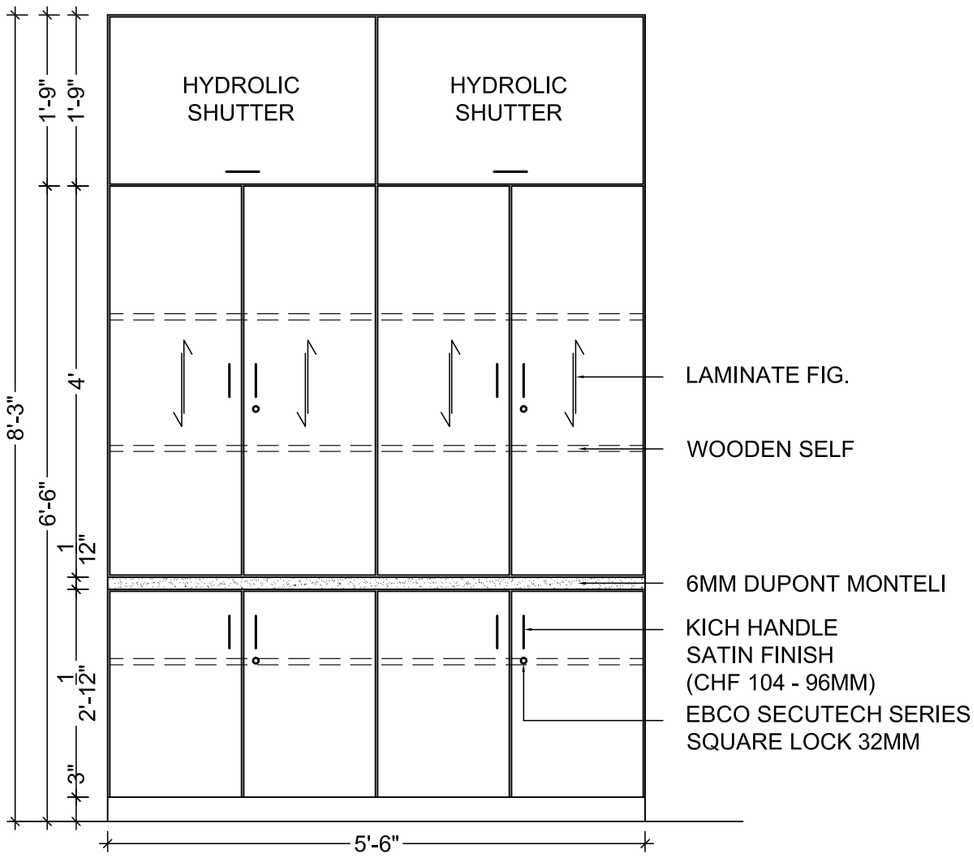

FRONT ELEVATION

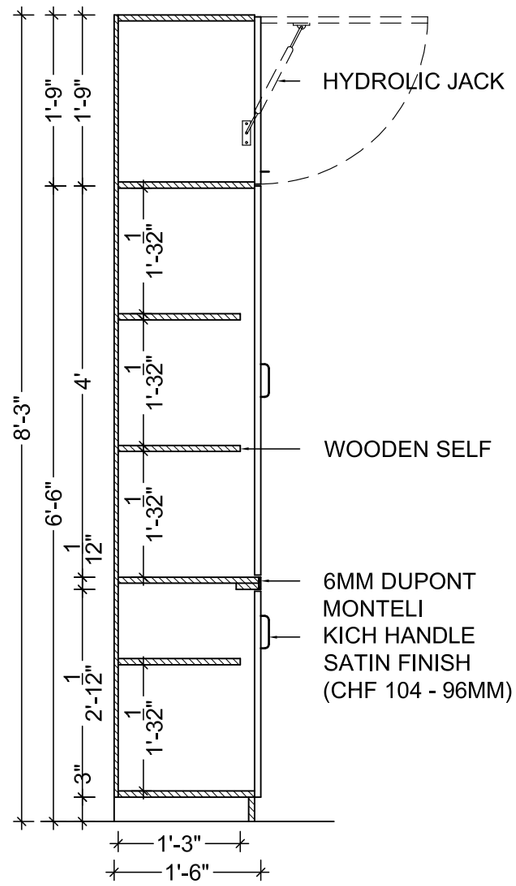

SECTION AA

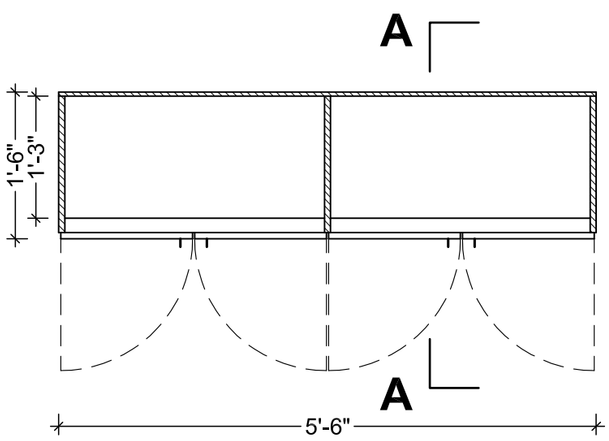

PLAN (LVL4'0")

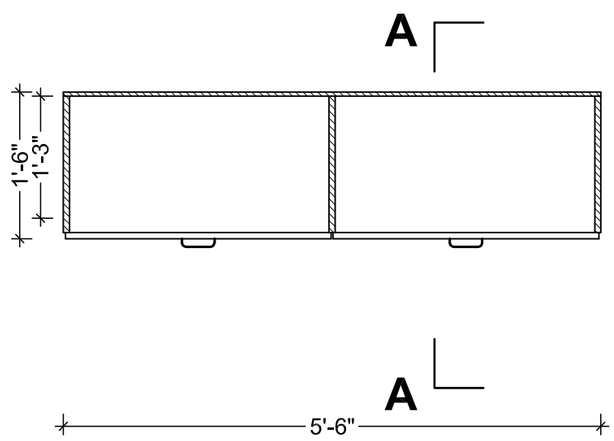

PLAN (LVL7'0")

CUPBOARD DETAIL (CB4)

NOTE :- CHECK DIMENSION AT SITE BEFORE EXECUTION

PROPOSED FIRST FLOOR PLAN
at EXISTING BULDING OF
RAJKOT NAGRIK SAHKARI BANK
at DHORAJI ,

REVISED 02

V n B Designs
Architecture & Interior
Anil Vadgama
Architect
9824167971
210, naxtra II commercial complex, opp. k.k.v hall, 150 feet wide ring road,
rajkot- 360 005, e-mail : vnbdesigns@rediffmail.com

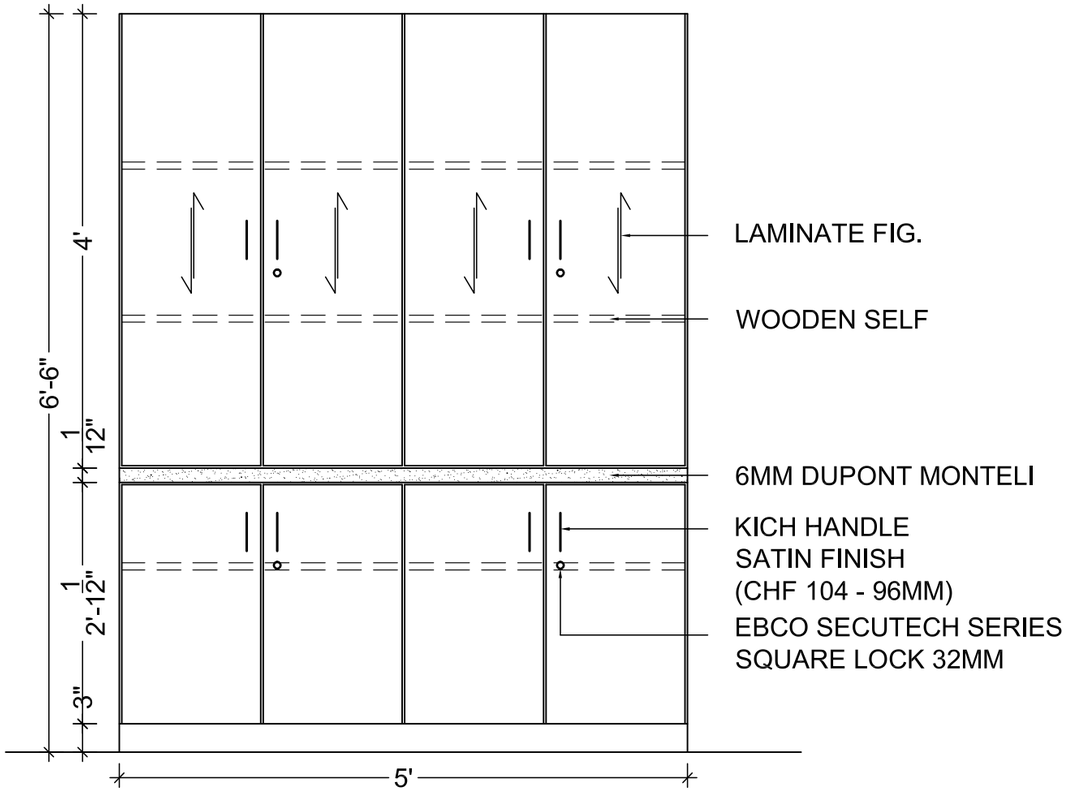

FRONT ELEVATION

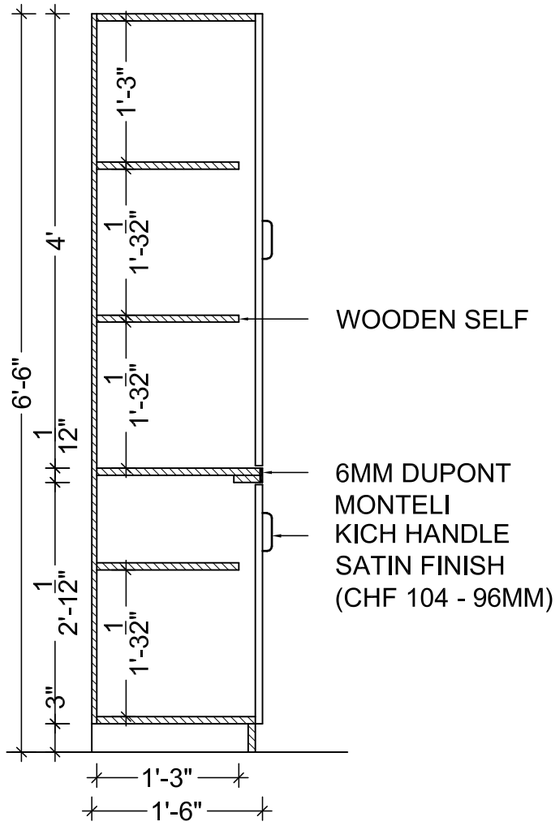

SECTION AA

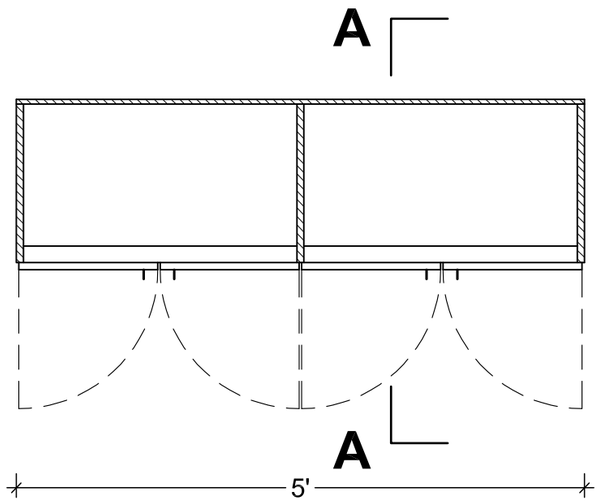

PLAN (LVL4'0")

CUPBOARD DETAIL (CB5)

NOTE :- CHECK DIMENSION AT SITE BEFORE EXECUTION

V n B Designs
Architecture & Interior
Anil Vadgama
Architect
9824167971
210, naxtra II commercial complex, opp. k.k.v hall, 150 feet wide ring road, rajkot- 360 005.
e-mail : vnbdesigns@rediffmail.com

REVISED 02

PROPOSED FIRST FLOOR PLAN
at EXISTING BULDING OF
RAJKOT NAGRIK SAHKARI BANK
at DHORAJI ,

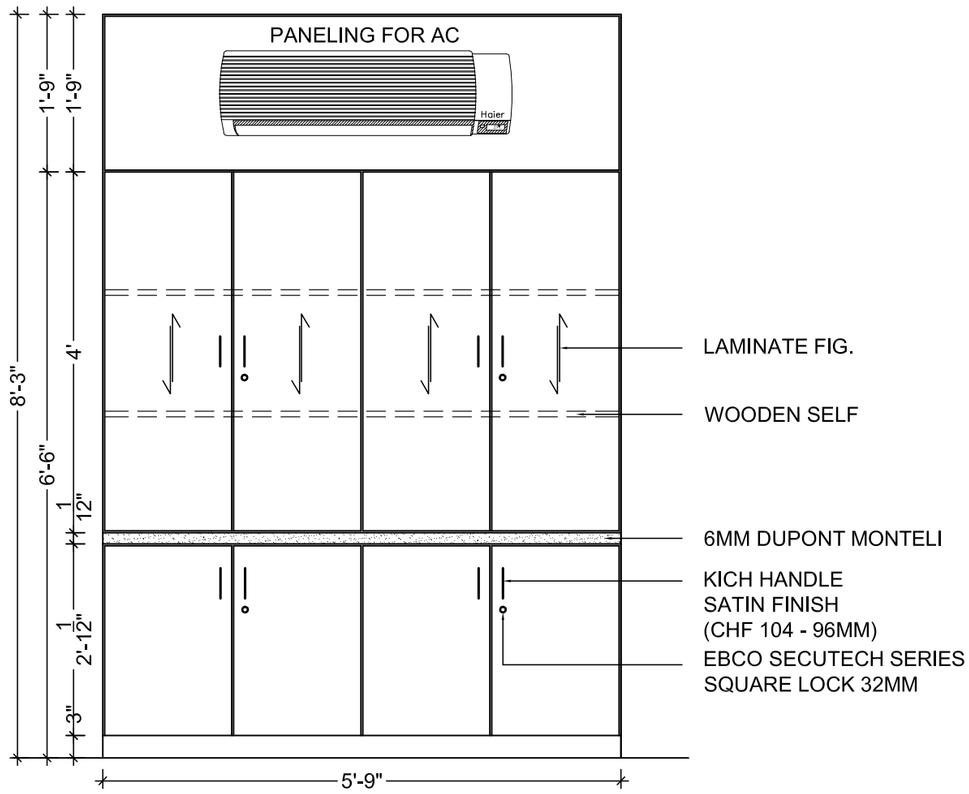

FRONT ELEVATION

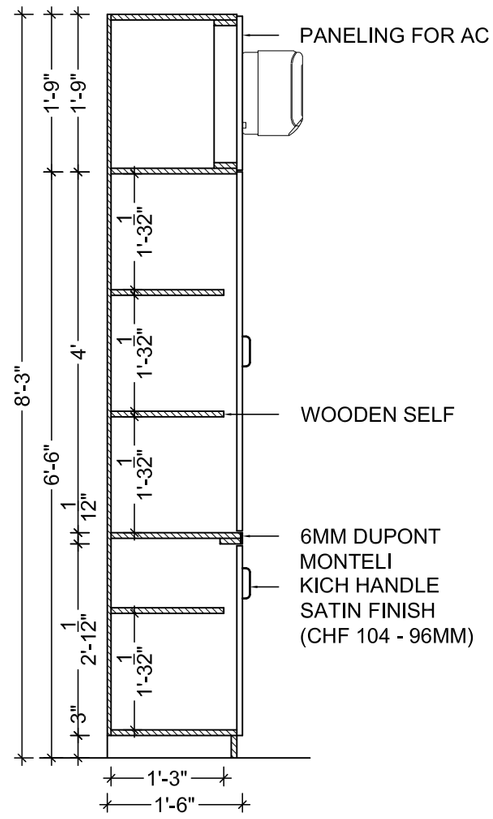

SECTION AA

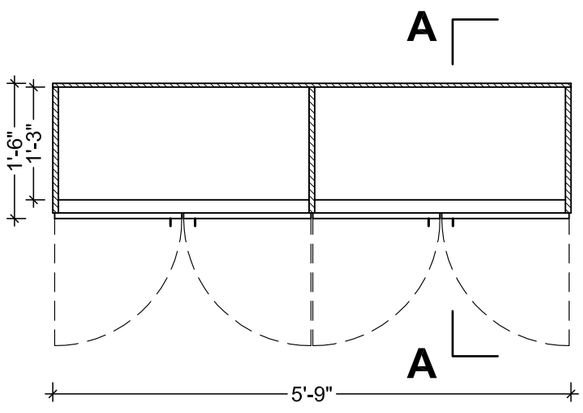

PLAN (LVL4'0")

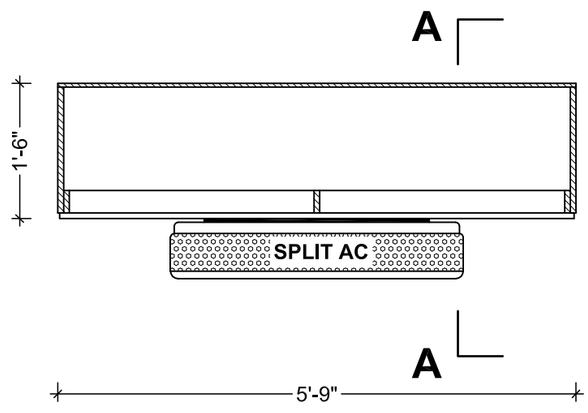

PLAN (LVL7'0")

CUPBOARD DETAIL (CB6)

NOTE :- CHECK DIMENSION AT SITE BEFORE EXECUTION

PROPOSED SECOND FLOOR PLAN
at EXISTING BULDING OF
RAJKOT NAGRIK SAHKARI BANK
at DHORAJI ,

REVISED 02

V n B Designs
Architecture & Interior
Anil Vadgama
Architect
98241 67971
210, naxtra II commercial complex, opp. k.k.v hall, 150 feet wide ring road,
rajkot- 360 005, e-mail : vnbdesigns@rediffmail.com

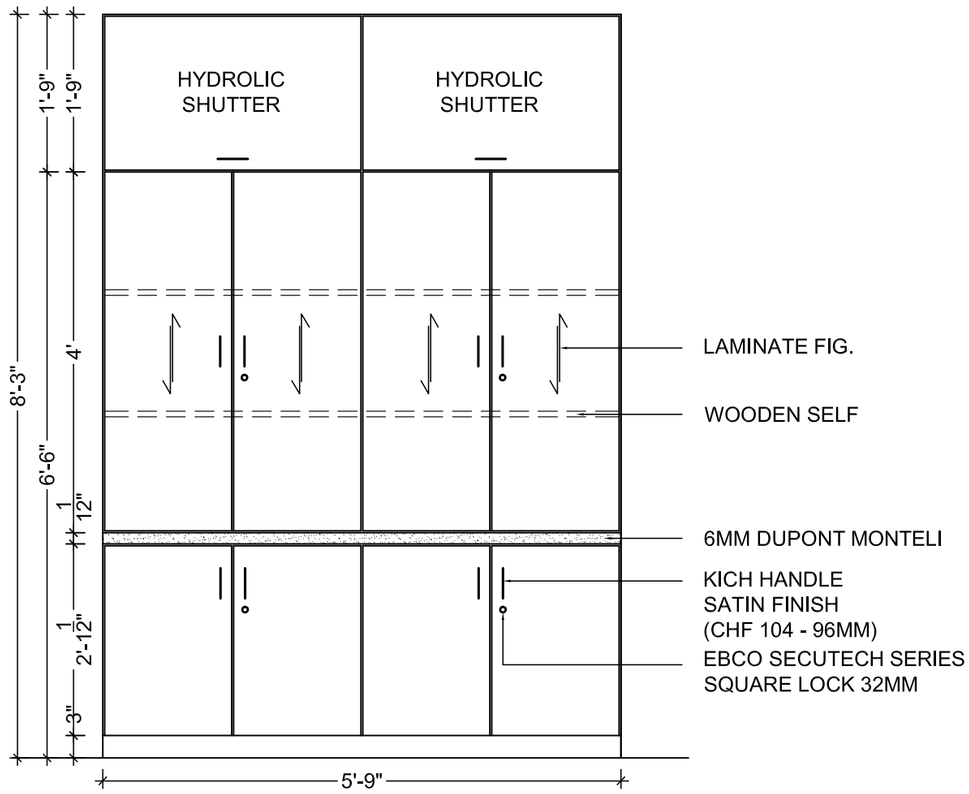

FRONT ELEVATION

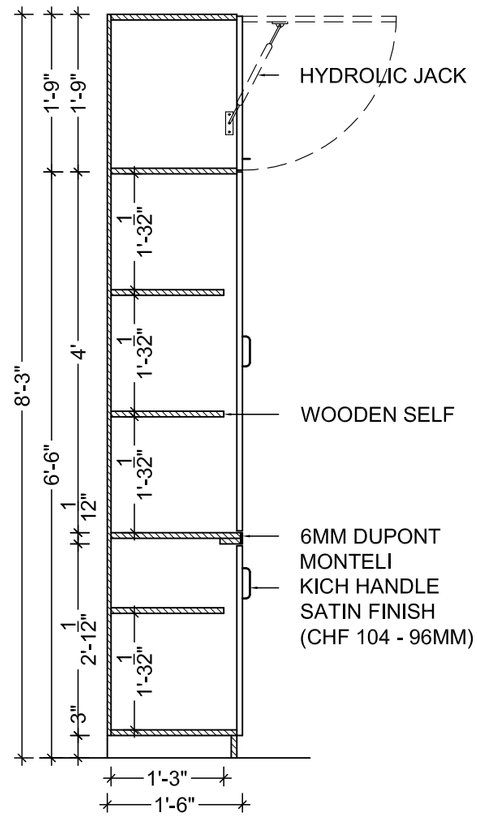

SECTION AA

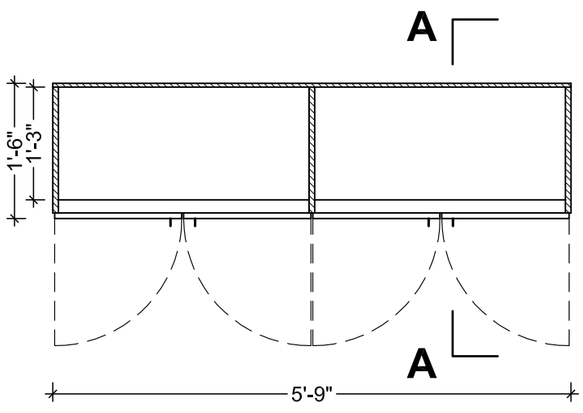

PLAN (LVL4'0")

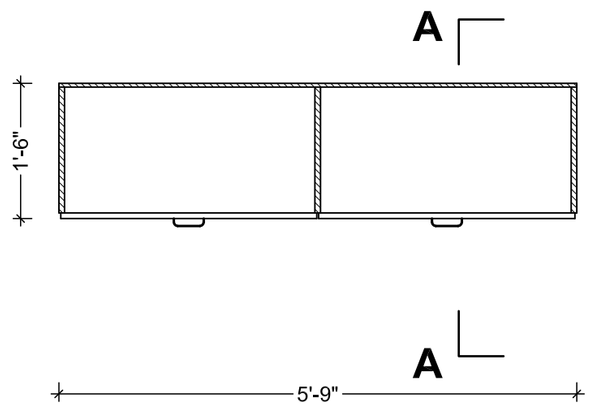

PLAN (LVL7'0")

CUPBOARD DETAIL (CB7)

NOTE :- CHECK DIMENSION AT SITE BEFORE EXECUTION

PROPOSED SECOND FLOOR PLAN
at EXISTING BULDING OF
RAJKOT NAGRIK SAHKARI BANK
at DHORAJI ,

REVISED 02

V n B Designs
Architecture & Interior
Anil Vadgama
Architect
98241 67971
210, naxtra II commercial complex, opp. k.k.v hall, 150 feet wide ring road,
rajkot- 360 005, e-mail : vnbdesigns@rediffmail.com

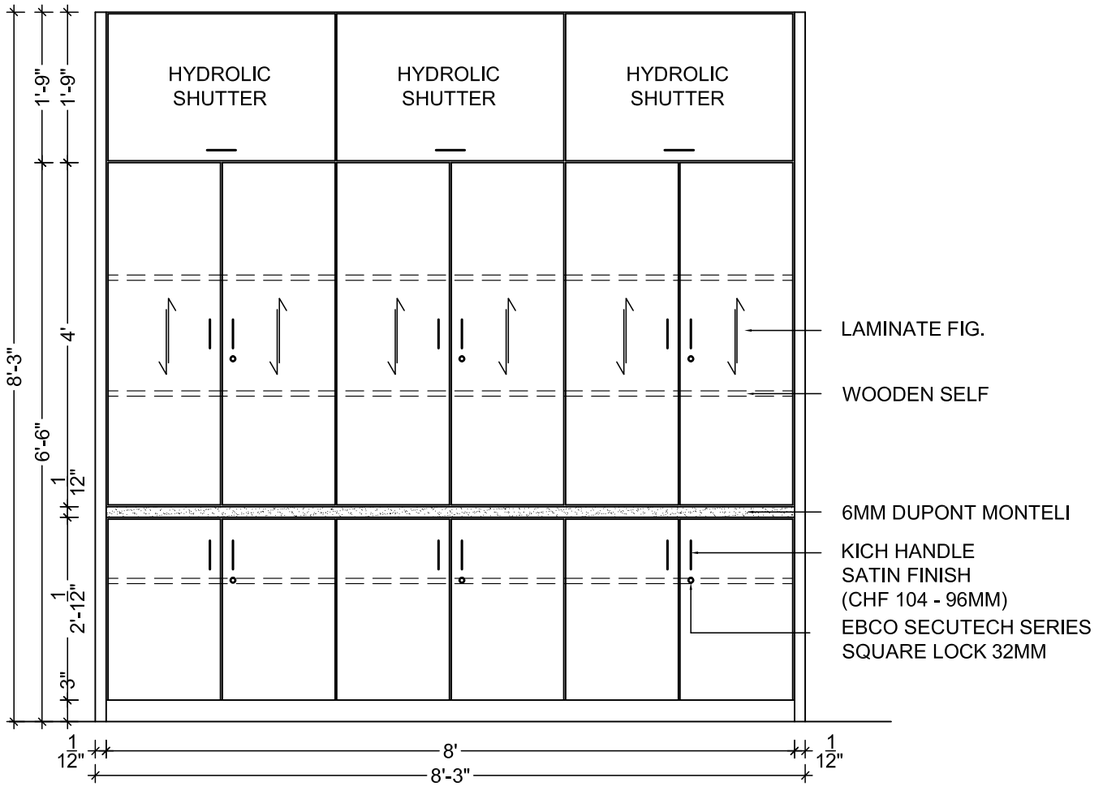

FRONT ELEVATION

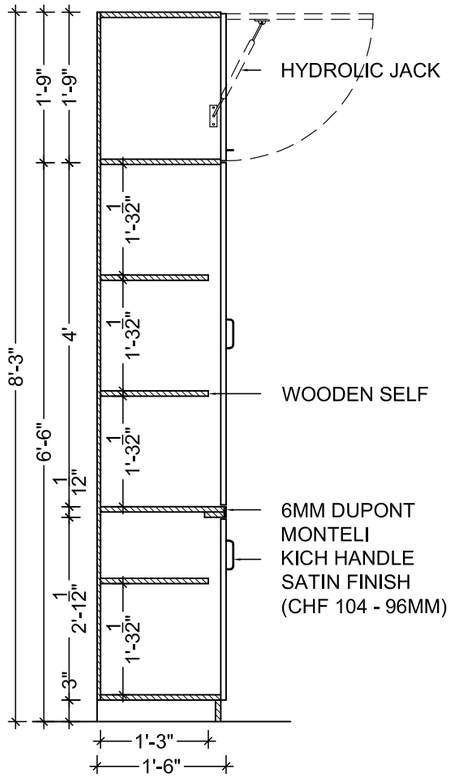

SECTION AA

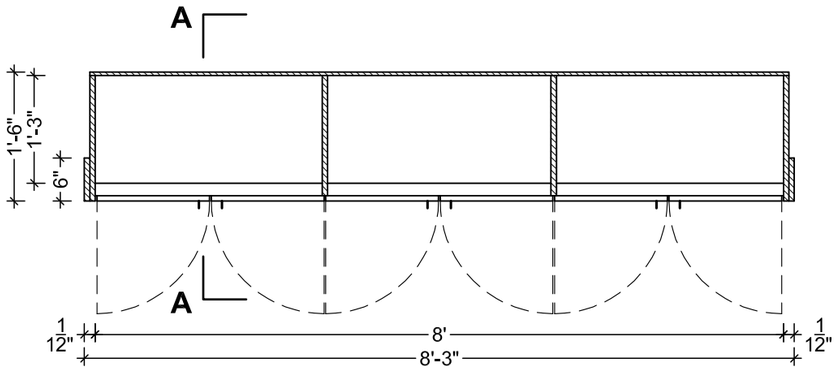

PLAN (LVL4'0")

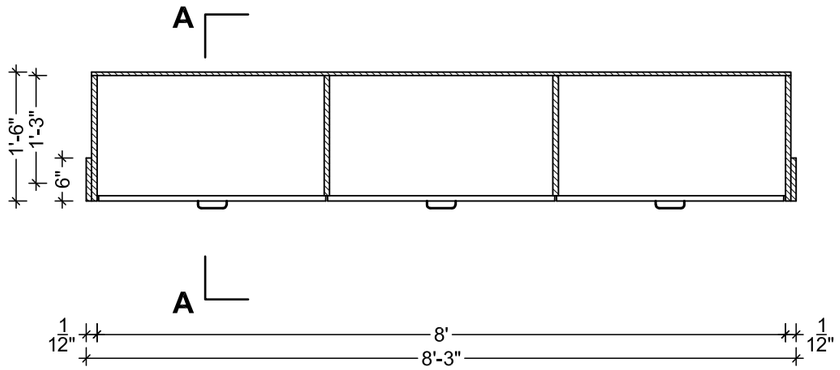

PLAN (LVL7'0")

CUPBOARD DETAIL (CB8)

NOTE :- CHECK DIMENSION AT SITE BEFORE EXECUTION

V n B Designs
Architecture & Interior
Anil Vadgama
Architect
9824167971
210, naxtra II commercial complex, opp. k.k.v hall, 150 feet wide ring road, rajkot- 360 005.
e-mail : vnbdesigns@rediffmail.com

REVISED 02

PROPOSED SECOND FLOOR PLAN
at EXISTING BULDING OF
RAJKOT NAGRIK SAHKARI BANK
at DHORAJI ,

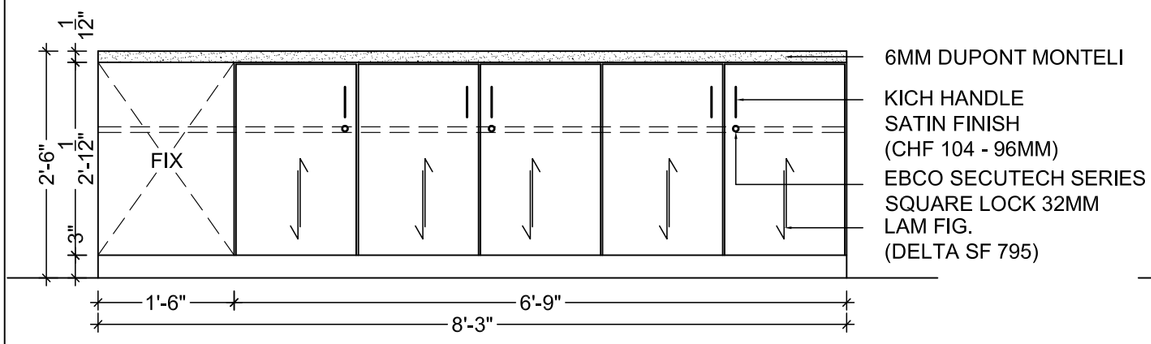

FRONT ELEVATION

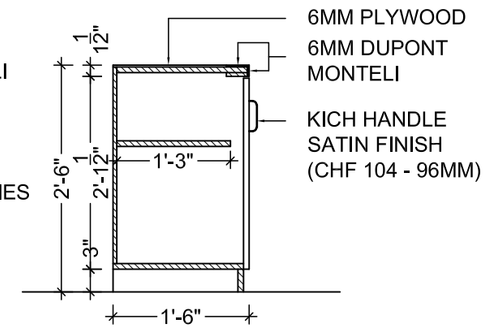

SECTION AA

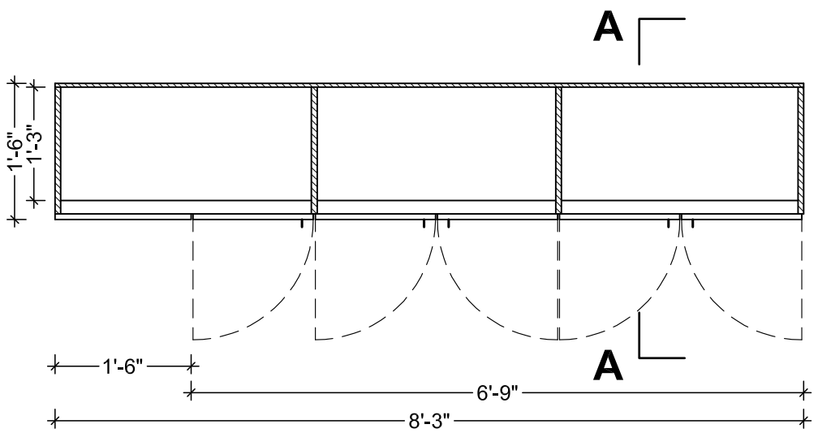

PLAN (LVL4'0")

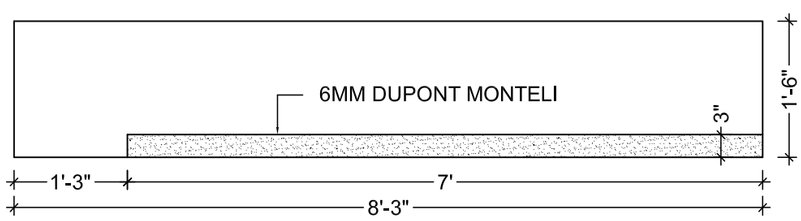

TOP PLAN

LOW HEIGHT CABINET DETAIL (LHS1)

NOTE :- CHECK DIMENSION AT SITE BEFORE EXECUTION

PROPOSED FIRST FLOOR PLAN
at EXISTING BULDING OF
RAJKOT NAGRIK SAHKARI BANK
at DHORAJI ,

REVISED 02

V n B Designs
Architecture & Interior
Anil Vadgama
Architect
98241 67971
210, naxtra II commercial complex, opp. k.k.v hall, 150 feet wide ring road,
rajkot- 360 005, e-mail : vnbdesigns@rediffmail.com

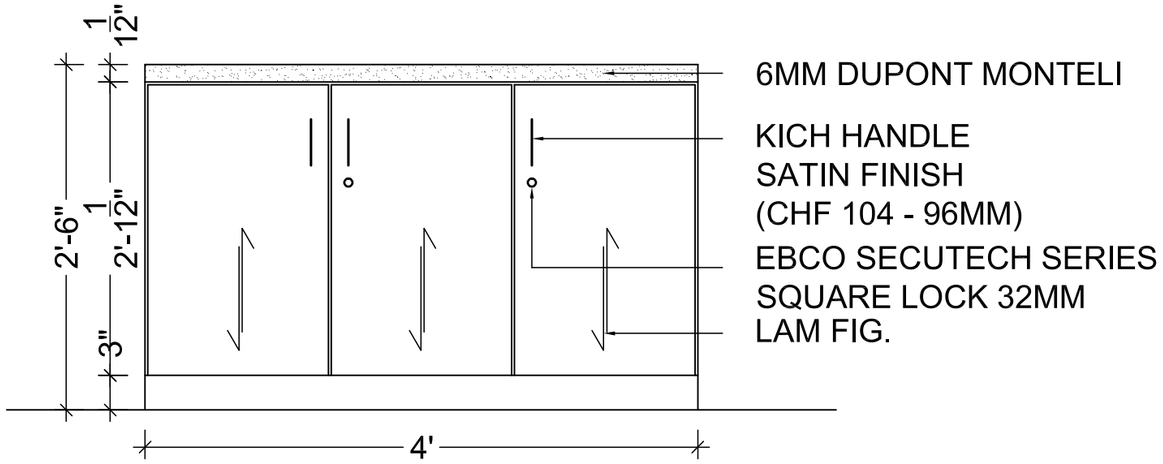

FRONT ELEVATION

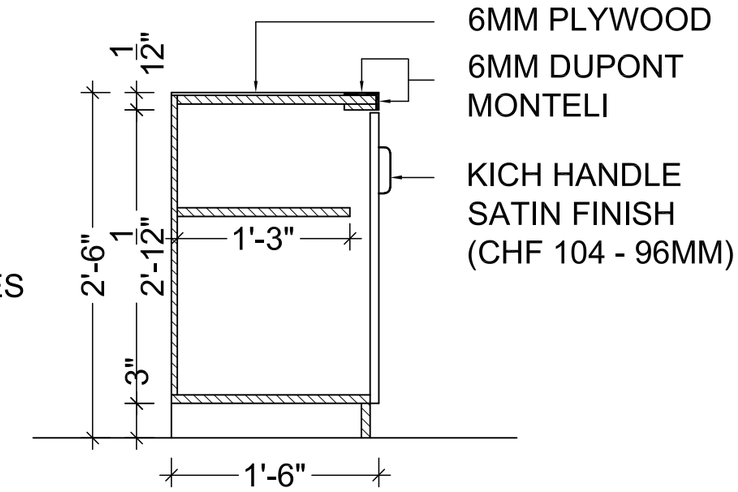

SECTION AA

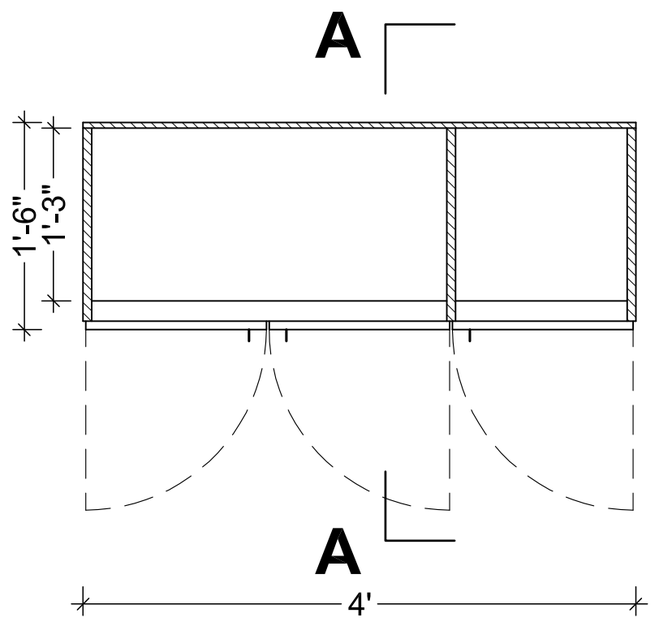

PLAN (LVL4'0")

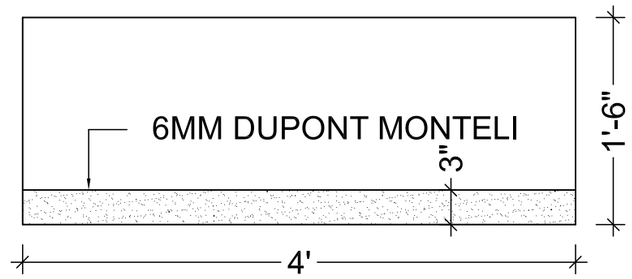

TOP PLAN

LOW HEIGHT CABINET DETAIL (LHS2)

NOTE :- CHECK DIMENSION AT SITE BEFORE EXECUTION

V n B Designs
Architecture & Interior
Anil Vadgama
Architect
9824167971
210, naxtra II commercial complex, opp. k.k.v hall, 150 feet wide ring road, rajkot- 360 005.
e-mail : vnbdesigns@rediffmail.com

REVISED 02

PROPOSED FIRST FLOOR PLAN
at EXISTING BULDING OF
RAJKOT NAGRIK SAHKARI BANK
at DHORAJI ,

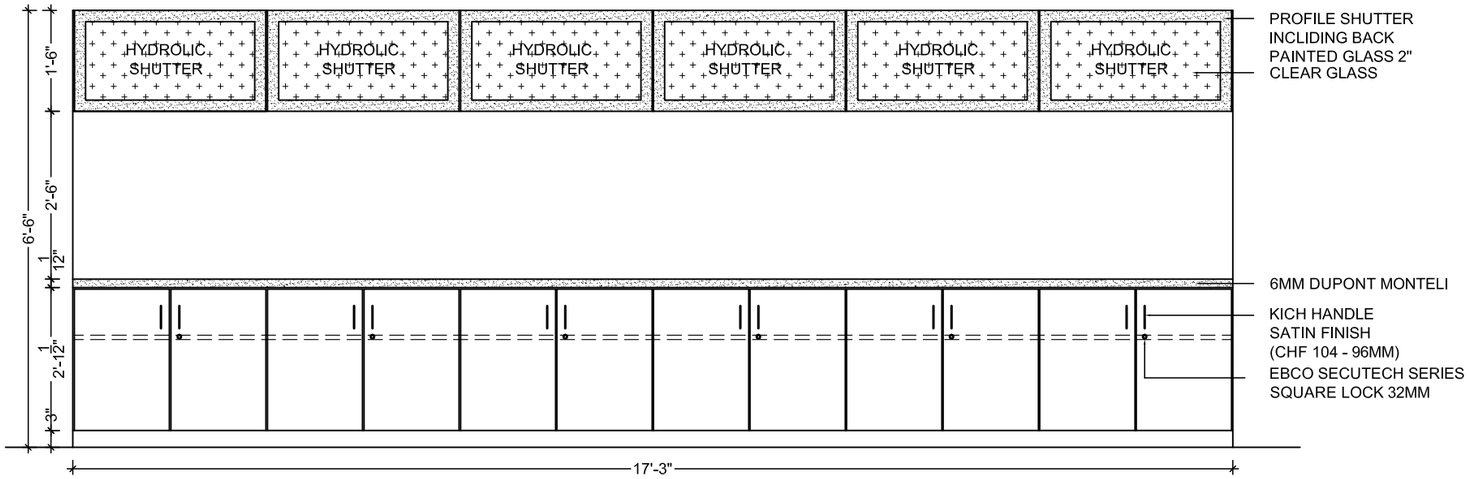

FRONT ELEVATION

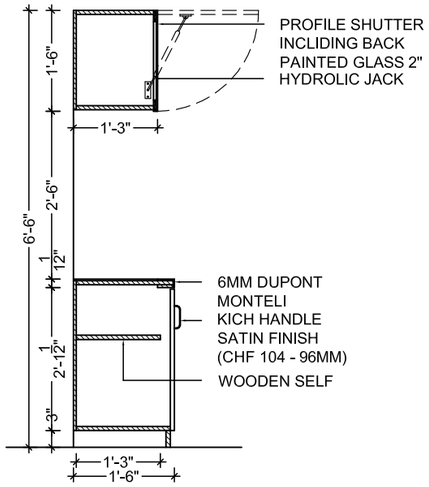

SECTION AA

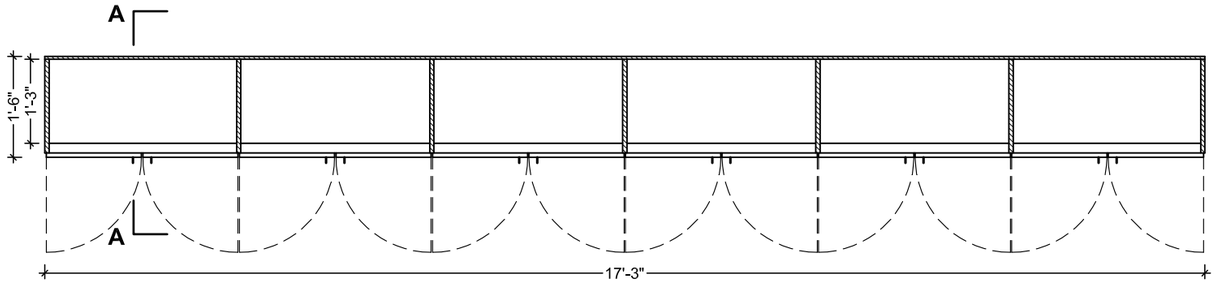

PLAN (LVL2'0")

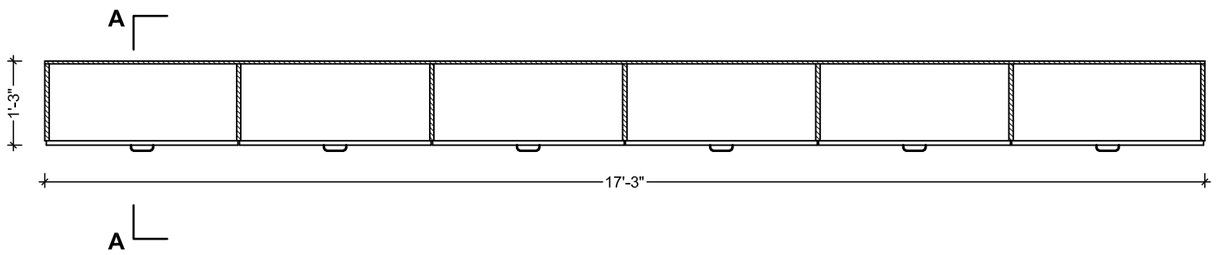

PLAN (LVL5'6")

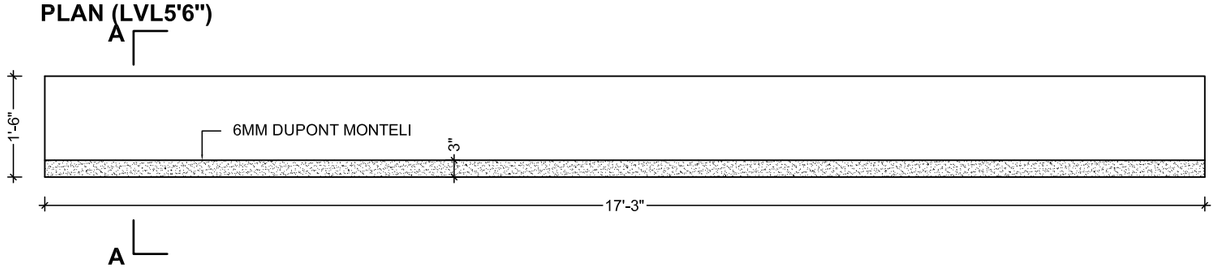

TOP PLAN

LOW HEIGHT CABINET DETAIL (LHS3)

NOTE :- CHECK DIMENSION AT SITE BEFORE EXECUTION

V n B Designs

Architecture & Interior

Anil Vadgama
Architect
9824167971

210, naxtra II commercial complex, opp. k.k.v hall, 150 feet wide ring road, rajkot- 360 005.
e-mail : vnbdesigns@rediffmail.com.

REVISED 02

PROPOSED SECOND FLOOR PLAN
at EXISTING BULDING OF
RAJKOT NAGRIK SAHKARI BANK
at DHORAJI ,

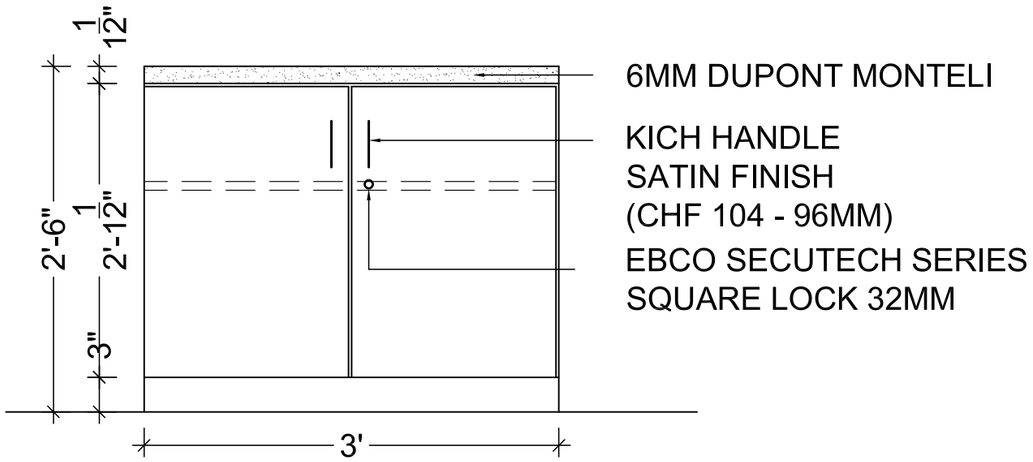

FRONT ELEVATION

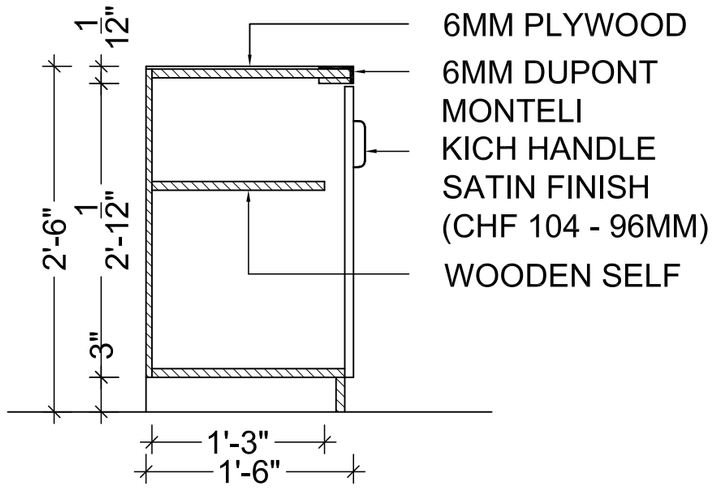

SECTION AA

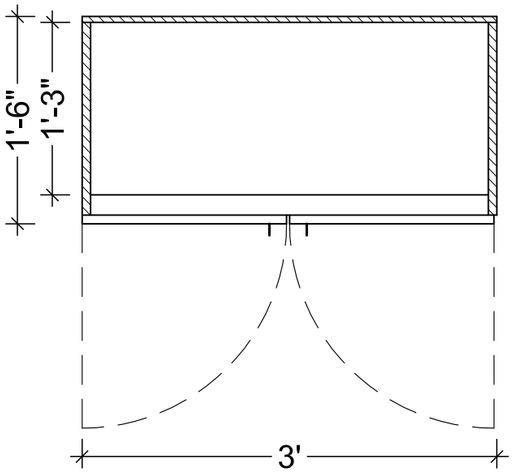

PLAN (LVL2'0")

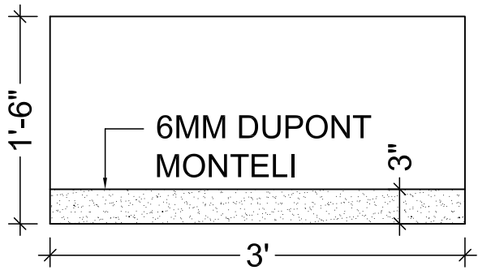

TOP PLAN

LOW HEIGHT CABINET DETAIL (LHS4)

NOTE :- CHECK DIMENSION AT SITE BEFORE EXECUTION

V n B Designs
Architecture & Interior
Anil Vadgama
Architect
9824167971
210, naxtra II commercial complex, opp. k.k.v hall, 150 feet wide ring road, rajkot- 360 005.
e-mail : vnbdesigns@rediffmail.com.

REVISED 02

PROPOSED SECOND FLOOR PLAN
at EXISTING BULDING OF
RAJKOT NAGRIK SAHKARI BANK
at DHORAJI ,

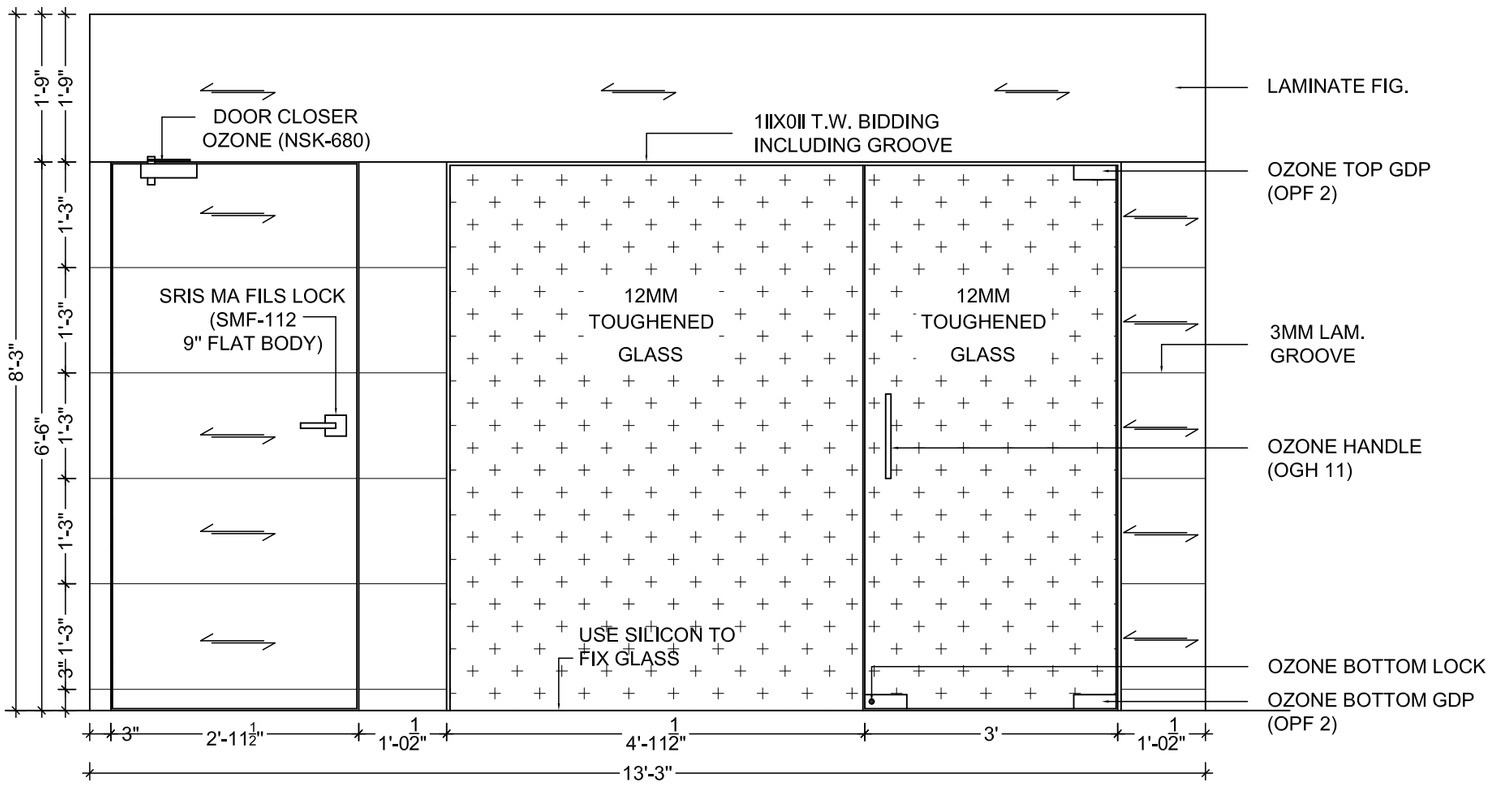

FRONT ELEVATION

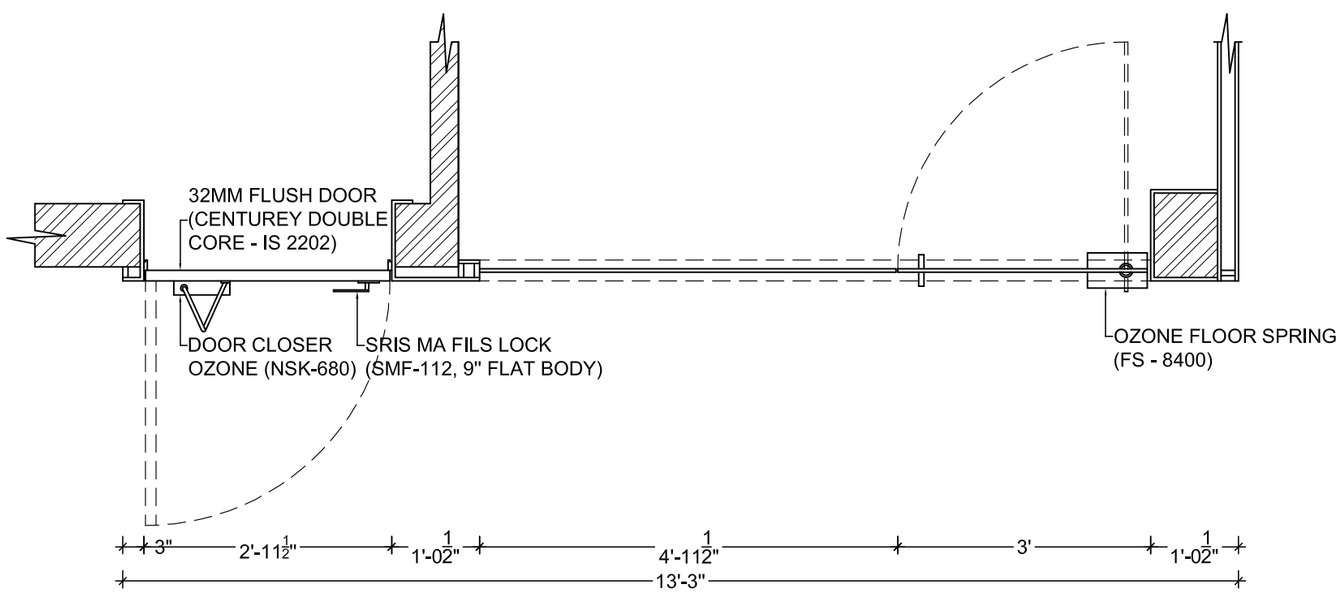

PLAN

PARTITION DETAIL (PT1)

NOTE :- CHECK DIMENSION AT SITE BEFORE EXECUTION

PROPOSED FIRST FLOOR PLAN
at EXISTING BULDING OF
RAJKOT NAGRIK SAHKARI BANK
at DHORAJI ,

REVISED 02

V n B Designs
Architecture & Interior
Anil Vadgama
Architect
98241 67971
210, naxtra II commercial complex, opp. k.k.v hall, 150 feet wide ring road,
rajkot- 360 005, e-mail : vnbdesigns@rediffmail.com

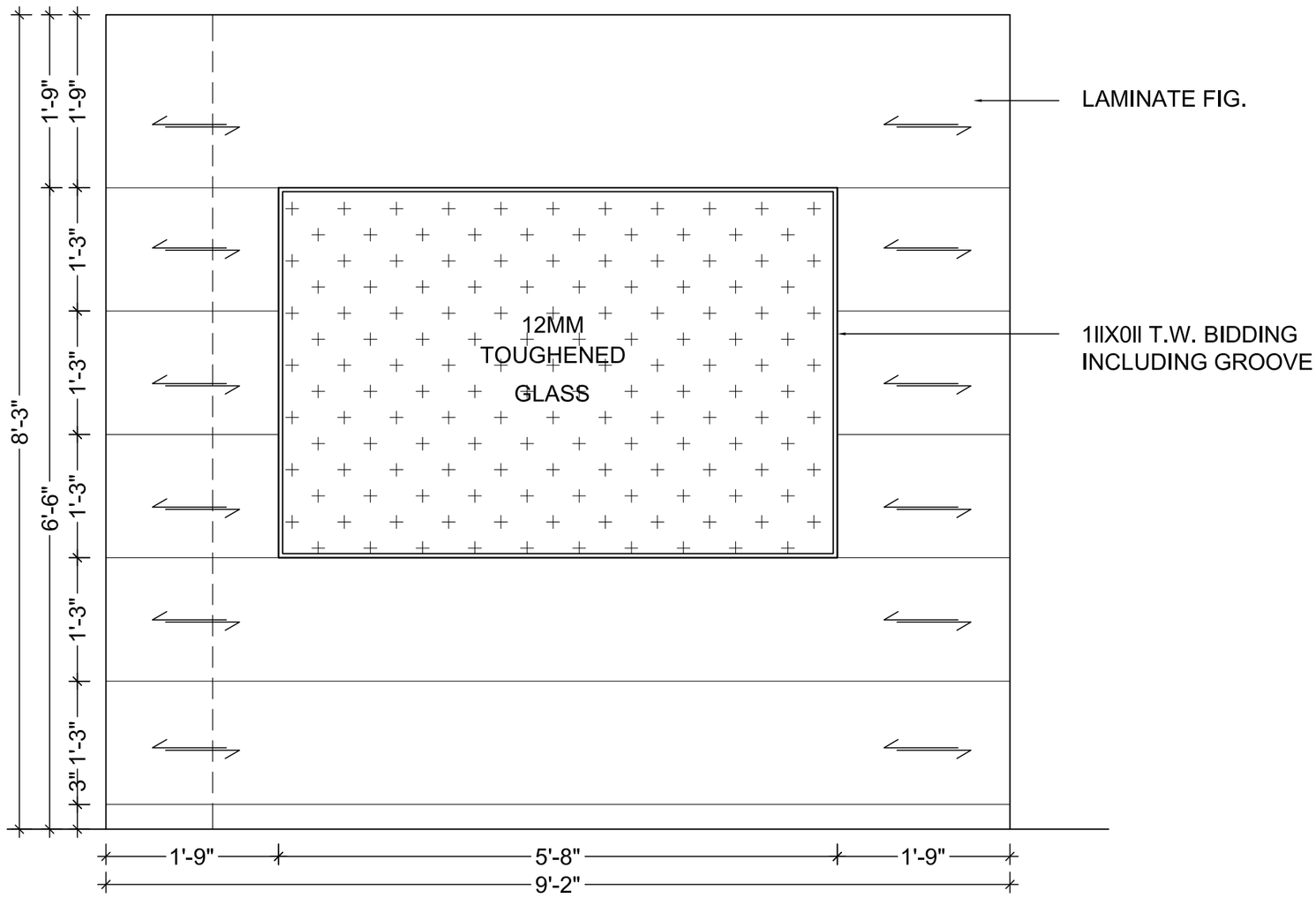

FRONT ELEVATION

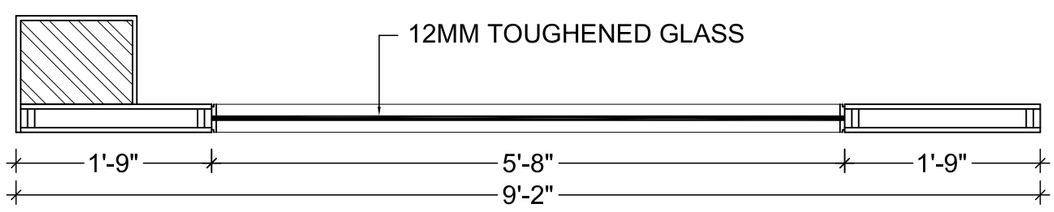

PLAN

PARTITION DETAIL (PT2)

NOTE :- CHECK DIMENSION AT SITE BEFORE EXECUTION

PROPOSED FIRST FLOOR PLAN
at EXISTING BULDING OF
RAJKOT NAGRIK SAHKARI BANK
at DHORAJI ,

REVISED 02

V n B Designs
Architecture & Interior
Anil Vadgama
Architect
98241 67971
210, naxtra II commercial complex, opp. k.k.v hall, 150 feet wide ring road,
rajkot- 360 005, e-mail : vnbdesigns@rediffmail.com

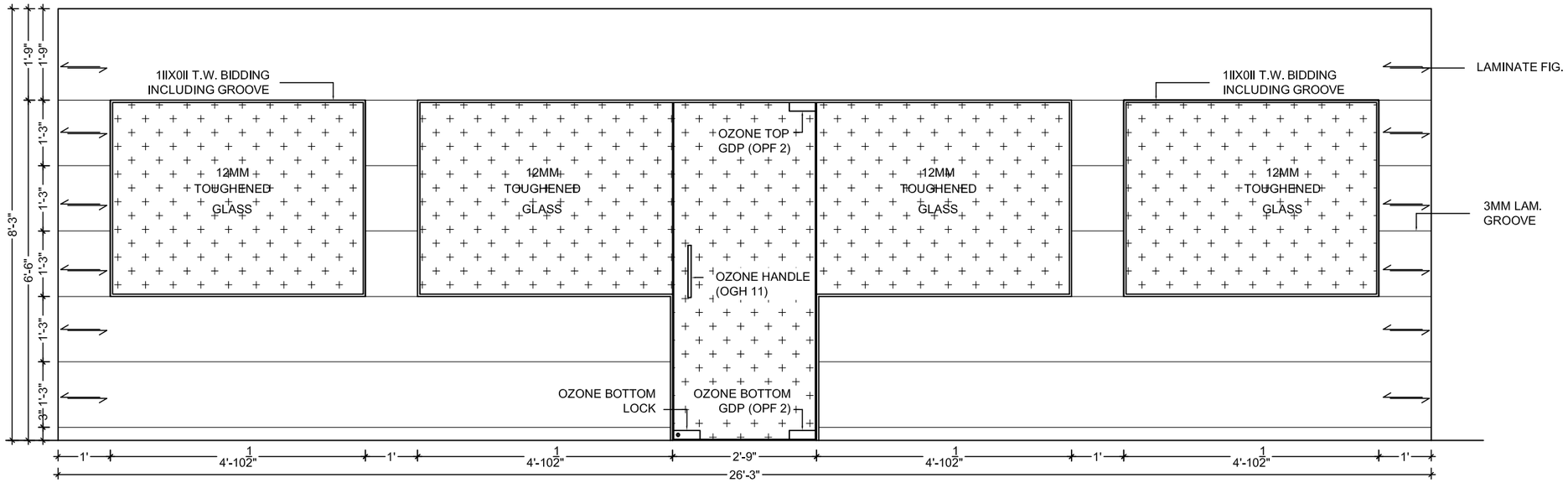

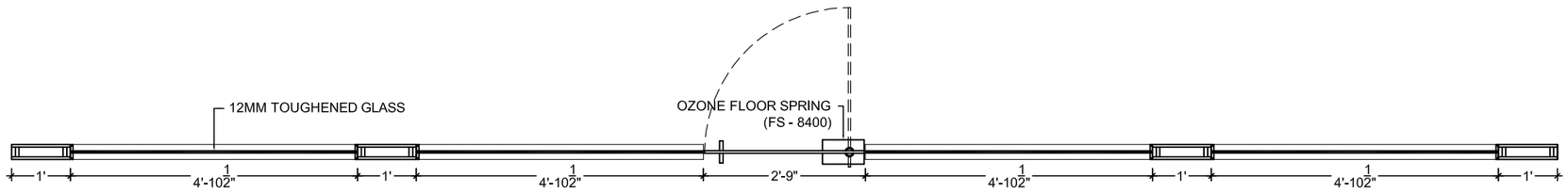

PARTITION DETAIL (PT3)

NOTE :- CHECK DIMENSION AT SITE BEFORE EXECUTION

V n B Designs
Architecture & Interior
Anil Vadgama
Architect
9824167971
210, naxtra II commercial complex, opp. k.k.v hall, 150 feet wide ring road, rajkot- 360 005.
e-mail : vnbdesigns@rediffmail.com

REVISED 02

PROPOSED SECOND FLOOR PLAN
at EXISTING BULDING OF
RAJKOT NAGRIK SAHKARI BANK
at DHORAJI ,

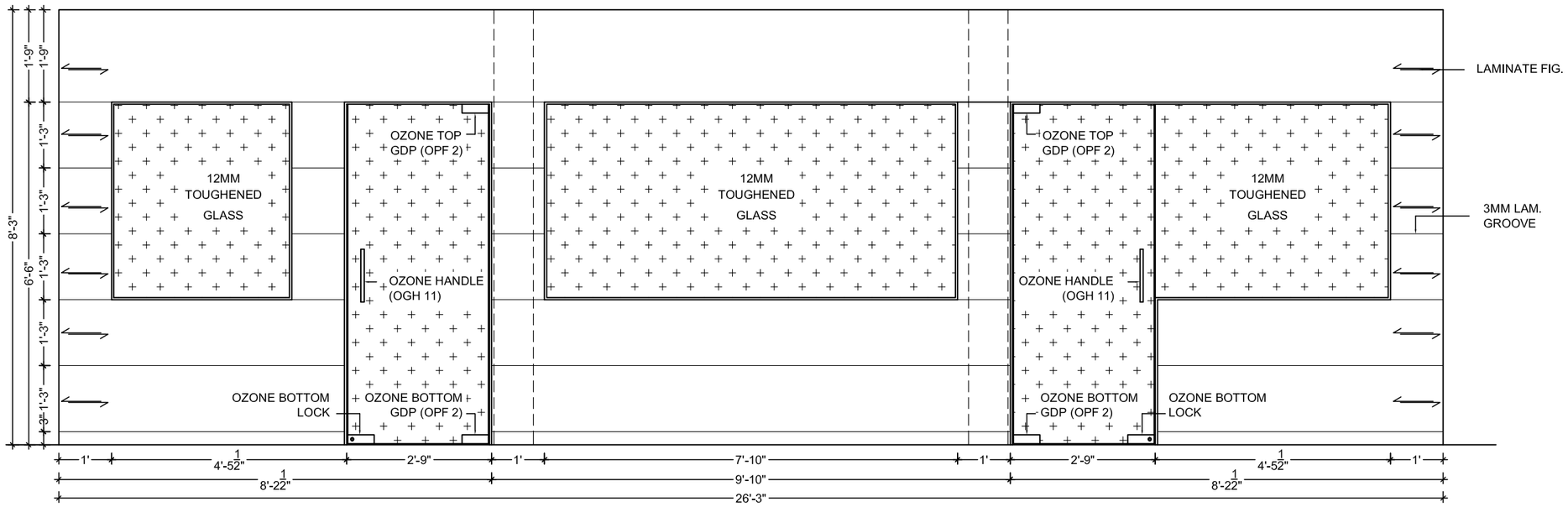

FRONT ELEVATION

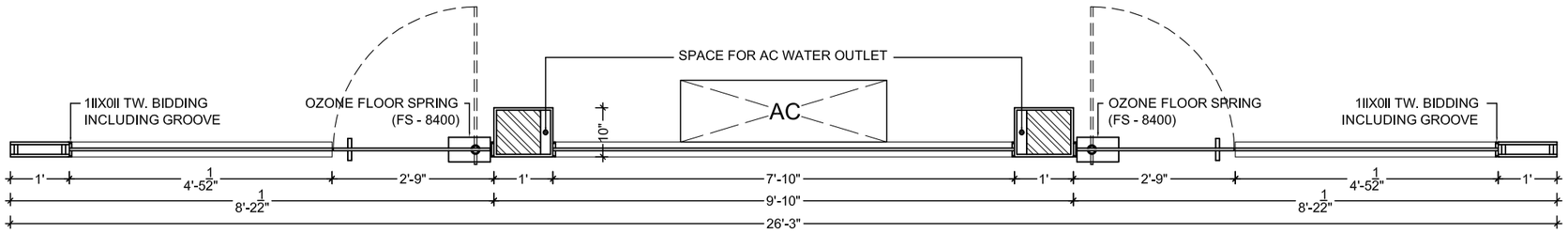

PLAN

PARTITION DETAIL (PT4)

NOTE :- CHECK DIMENSION AT SITE BEFORE EXECUTION

V n B Designs
Architecture & Interior
Anil Vadgama
Architect
9824167971
210, naxtra II commercial complex, opp. k.k.v hall, 150 feet wide ring road, rajkot- 360 005.
e-mail : vnbdesigns@rediffmail.com

REVISED 02

PROPOSED SECOND FLOOR PLAN
at EXISTING BULDING OF
RAJKOT NAGRIK SAHKARI BANK
at DHORAJI ,

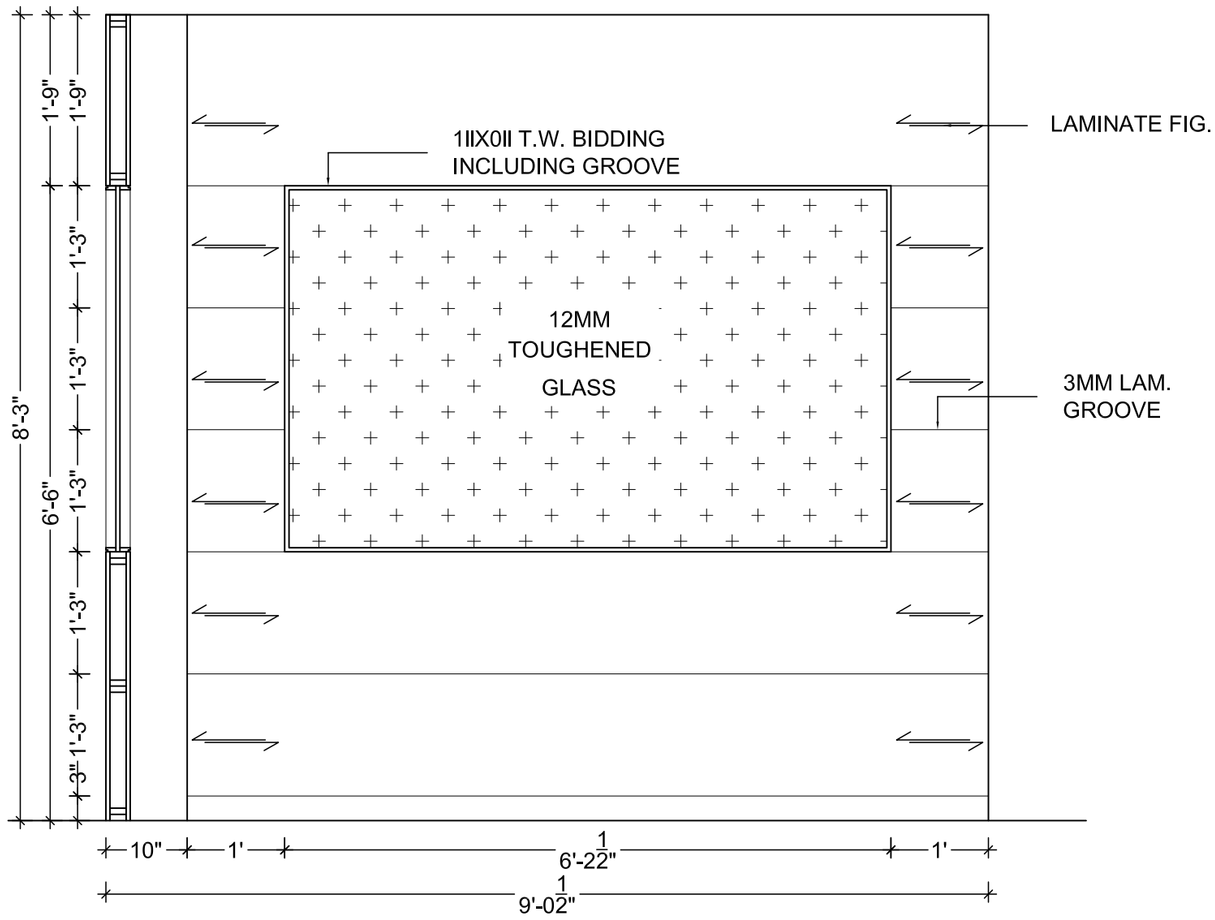

FRONT ELEVATION

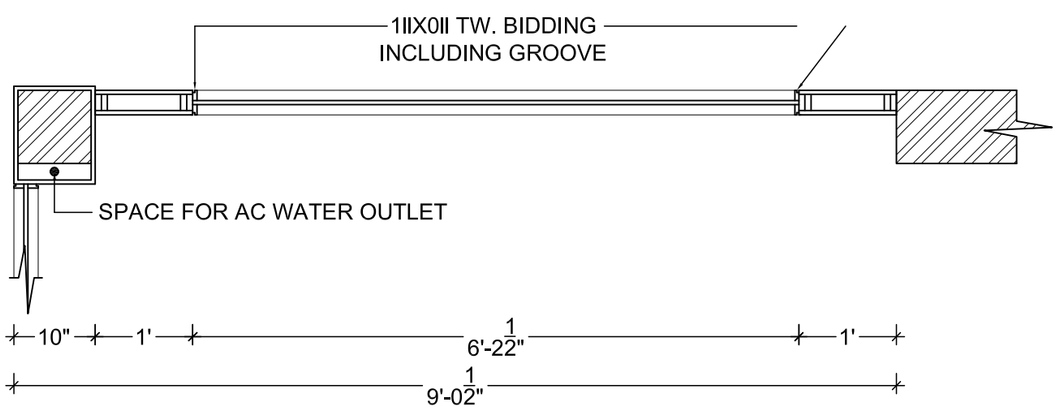

PLAN

PARTITION DETAIL (PT5)

NOTE :- CHECK DIMENSION AT SITE BEFORE EXECUTION

PROPOSED SECOND FLOOR PLAN
at EXISTING BULDING OF
RAJKOT NAGRIK SAHKARI BANK
at DHORAJI ,

REVISED 02

V n B Designs
Architecture & Interior
Anil Vadgama
Architect
98241 67971
210, naxtra II commercial complex, opp. k.k.v hall, 150 feet wide ring road,
rajkot- 360 005, e-mail : vnbdesigns@rediffmail.com

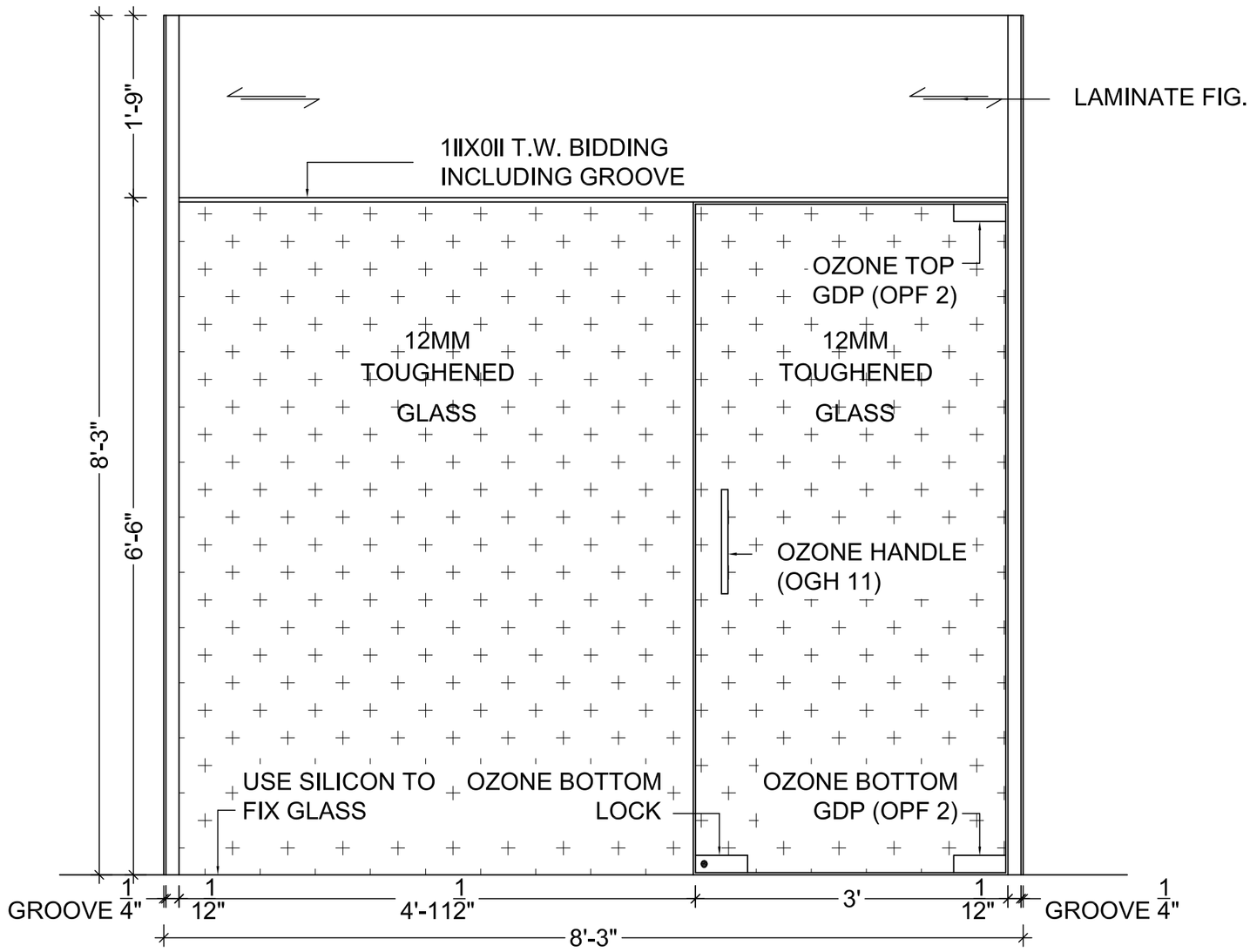

FRONT ELEVATION

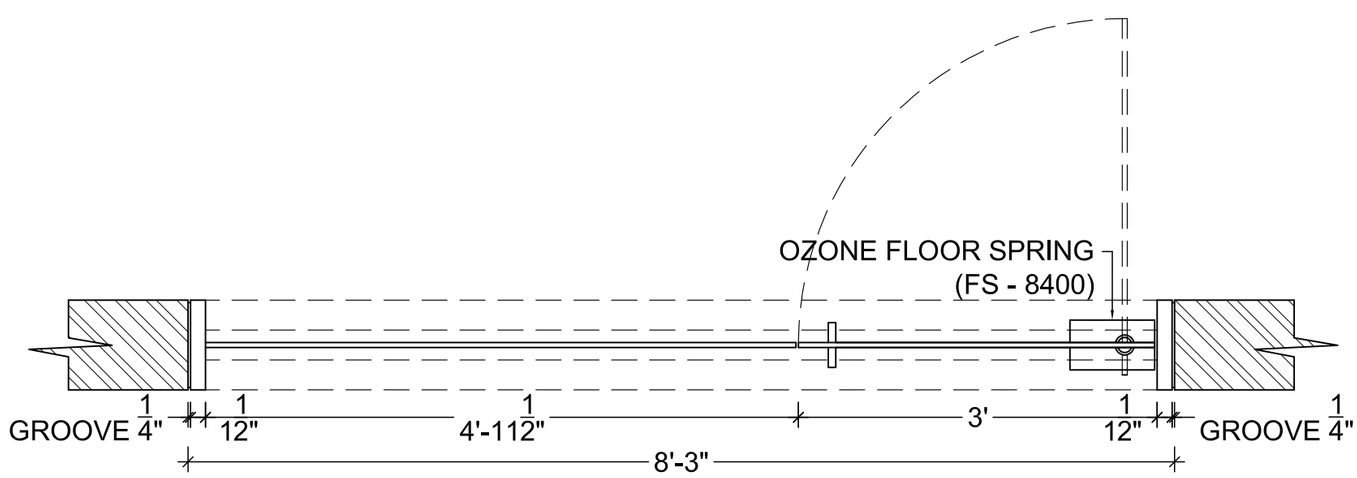

PLAN

MAIN DOOR DETAIL (MD2)

NOTE :- CHECK DIMENSION AT SITE BEFORE EXECUTION

PROPOSED SECOND FLOOR PLAN
at EXISTING BULDING OF
RAJKOT NAGRIK SAHKARI BANK
at DHORAJI ,

REVISED 02

V n B Designs
Architecture & Interior
Anil Vadgama
Architect
98241 67971
210, naxtra II commercial complex, opp. k.k.v hall, 150 feet wide ring road,
rajkot- 360 005, e-mail : vnbdesigns@rediffmail.com

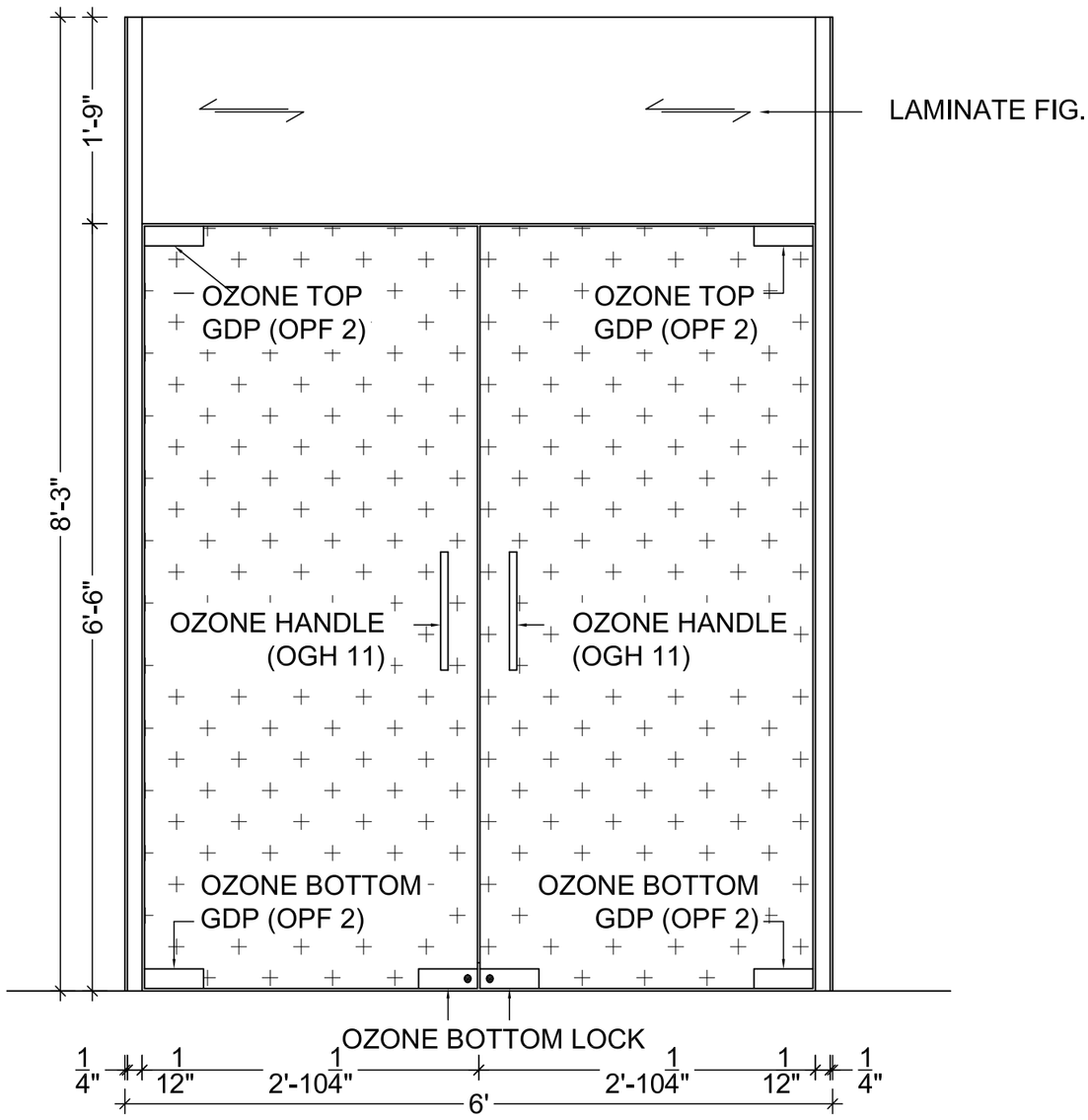

FRONT ELEVATION

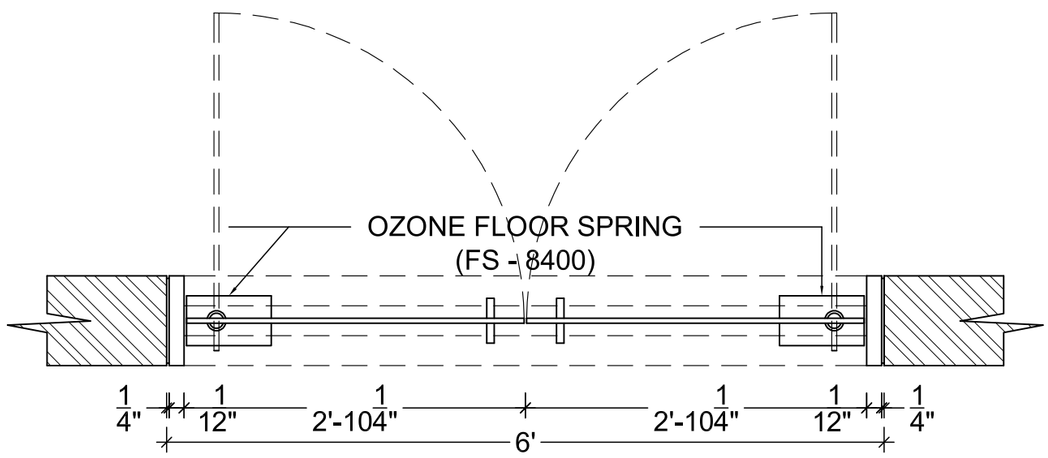

PLAN

MAIN DOOR DETAIL (MD1)

NOTE :- CHECK DIMENSION AT SITE BEFORE EXECUTION

PROPOSED GROUND FLOOR PLAN
at EXISTING BULDING OF
RAJKOT NAGRIK SAHKARI BANK
at DHORAJI ,

REVISED 02

V n B Designs
Architecture & Interior
Anil Vadgama
Architect
98241 67971
210, naxtra II commercial complex, opp. k.k.v hall, 150 feet wide ring road,
rajkot- 360 005, e-mail : vnbdesigns@rediffmail.com

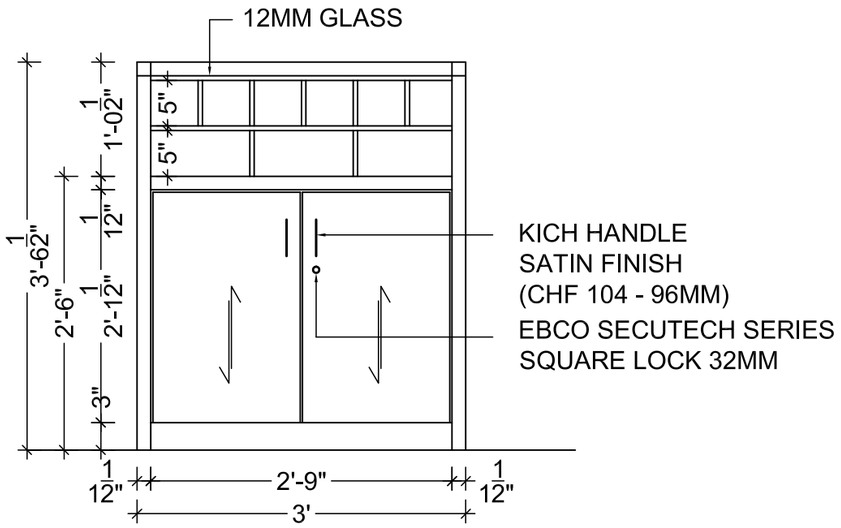

FRONT ELEVATION

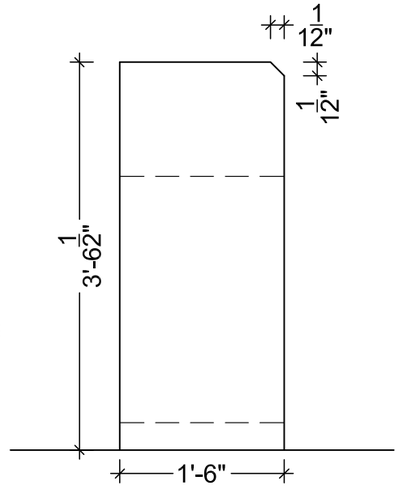

SIDE ELEVATION

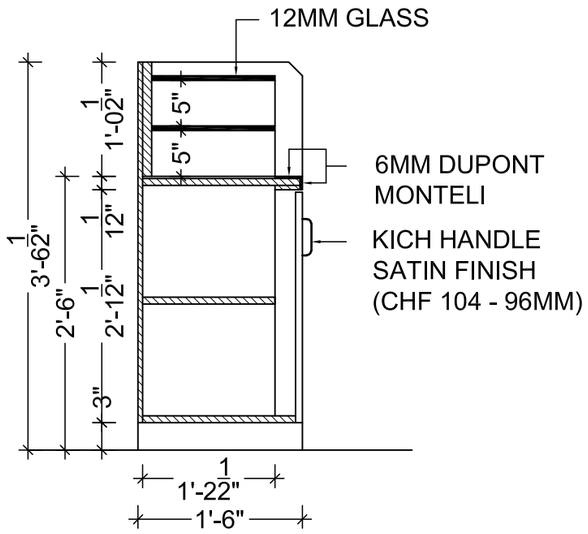

SECTION AA

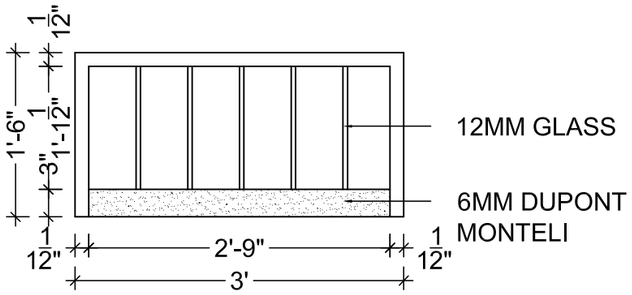

TOP PLAN

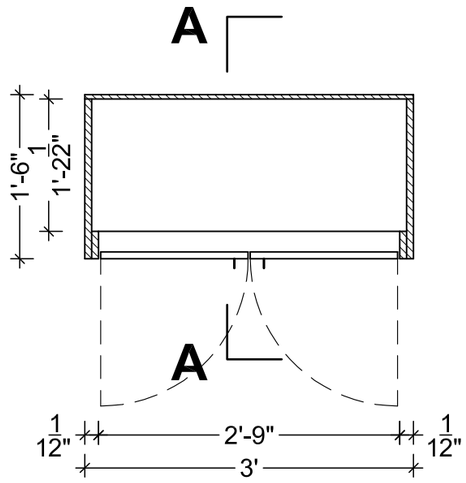

PLAN (LVL 2'0")

CUSTOMER WRITING DESK DETAIL (CWD1)

NOTE :- CHECK DIMENSION AT SITE BEFORE EXECUTION

V n B Designs
Architecture & Interior
Anil Vadgama
Architect
9824167971
210, naxtra II commercial complex, opp. k.k.v hall, 150 feet wide ring road, rajkot- 360 005.
e-mail : vnbdesigns@rediffmail.com

REVISED 02

PROPOSED FIRST AND SECOND FLOOR PLAN
at EXISTING BULDING OF
RAJKOT NAGRIK SAHKARI BANK
at DHORAJI ,

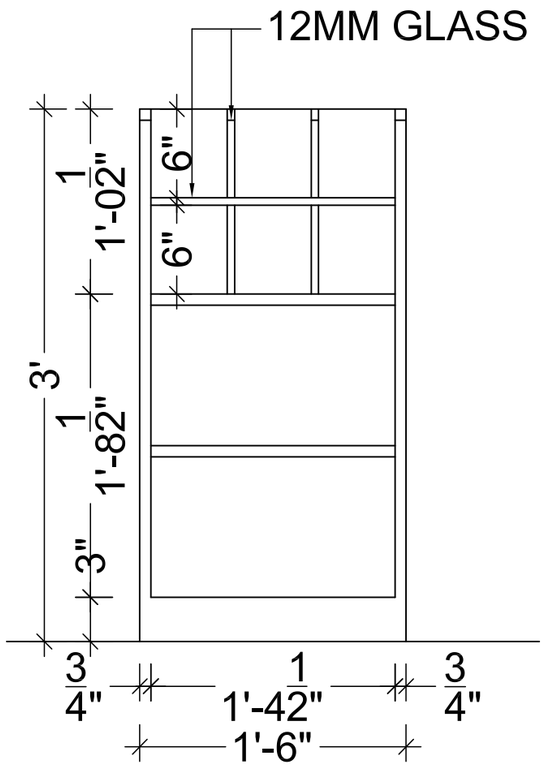

FRONT ELEVATION

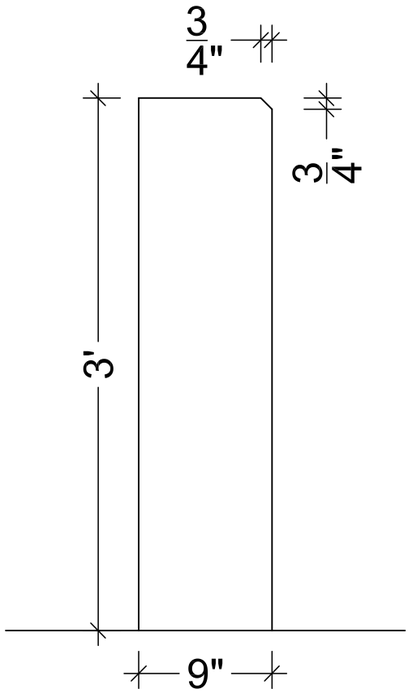

SIDE ELEVATION

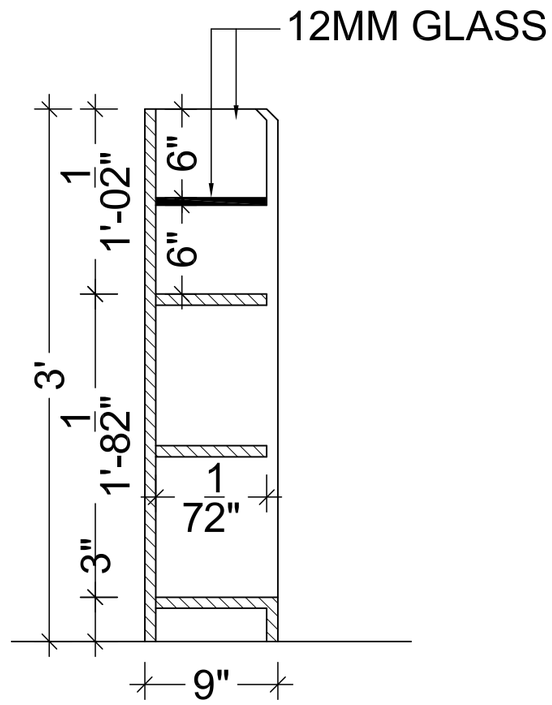

SECTION AA

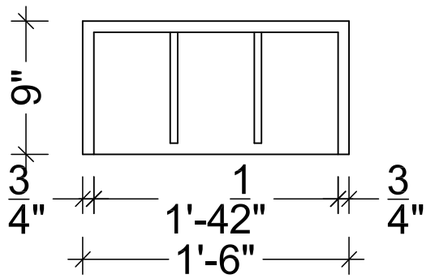

TOP PLAN

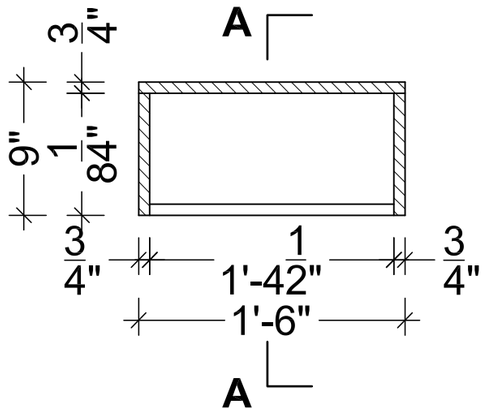

PLAN (LVL1'9")

CURRENCY CABINET UNIT DETAIL (CU1)

NOTE :- CHECK DIMENSION AT SITE BEFORE EXECUTION

V n B Designs
Architecture & Interior
Anil Vadgama
Architect
9824167971
210, naxtra II commercial complex, opp. k.k.v hall, 150 feet wide ring road, rajkot- 360 005.
e-mail : vnbdesigns@rediffmail.com

REVISED 02

PROPOSED FIRST FLOOR PLAN
at EXISTING BULDING OF
RAJKOT NAGRIK SAHKARI BANK
at DHORAJI ,